Welded Double Block Gauge Valves ~ Hard Seat

ORIFICE
.187"

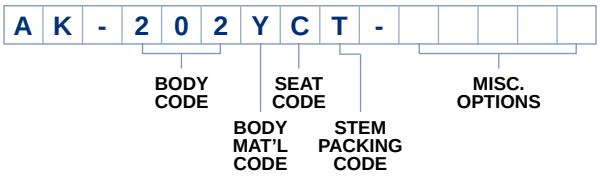

ORDERING INFORMATION

PART NO.	CONNECTIONS INLET	CONNECTIONS OUTLET	BODY & BONNET	SEAT	PACKING
.187" Orifice					PTFE Pressure-Core® Stem Seal Max Pressure 10,000 PSI @ 200°F
AK-202YCT	1/2" FNPT Standard		Carbon Steel	Carbide Ball	
AK-202SCT			316 SS		

OPTION CODE	DESCRIPTION	
Body Material Options		
P	ASTM A105 CF Carbon Steel *For Use with Grafoil® Packed Bonnets*	
Seat Material Options		Refer to Charts C and E on Page 22 and Pressure and Process Temperature Charts on Page 23.
N	Monel® Ball Seat	
R	Ceramic Ball Seat	
6	316 SS Ball Seat	
Stem Packing Material Options		
T	PTFE Pressure-Core® Stem Seal	
G	Low-Torque™ Grafoil® Packed	
J	PTFE Pressure-Core® Stem Seal (Low Temperature -50°F)	
Miscellaneous Options *See Complete List on Page 24*		
AM7	Male Pipe Socket Weld - Male Inlet Only	
S1	Monel Stem Material	
W	Safety Bonnet Lock Plate (Lock Pin Standard)	
W1	316 SS Tag	
WK	Paper Tag	
XL	Clean for Critical Service (Oxygen or Chlorine)	

AK-202YCT

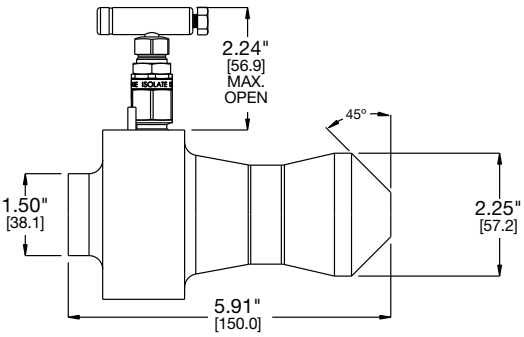

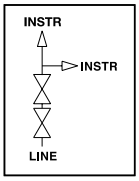

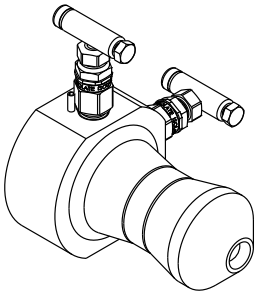

MATERIALS OF CONSTRUCTION

PART DESCRIPTION	CARBON STEEL	316 SS
Body	ASTM A350-LF2 CS	ASTM A479-316 SS
Bonnet	ASTM A479-316 SS	ASTM A479-316 SS
Stem	ASTM A479-316 SS	ASTM A479-316 SS
Seal Retainer	ASTM A479-316 SS	ASTM A479-316 SS
Handle Assembly	ASTM A108 CS	ASTM A581 18-8 300 SS

- PGI Carbon Steel Products are plated for corrosion prevention.
- PGI 316 SS Products meet the requirements of NACE MR0175/ISO 15156-3.
- 100% Pressure Tested

MAX Cv RATINGS

ORIFICE SIZE	BODY STYLE Straight
.187"	.53
Approximate Valve Weight: 8.00 lbs [3.62 kg]	