Bulk Gas Valves

Microelectronics Product Line

Catalog 4507/USA

October 2003

VERIFLO

ISO 9001 Certified

BULK GAS VALVES

Microelectronics Product Line

Catalog 4507USA

October 2003

table of contents

Parker Hannifin Corporation
Veriflo Division
250 Canal Boulevard
Richmond, CA 94804-0034
Telephone 510.235.9590
Fax 510.232.7396
http://www.veriflo.com

Veriflo Division

Veriflo Division, Parker Hannifin Corporation is a leading manufacturer of precision valves, regulators and surface mount components for the control and application of liquids and gases used in the fabrication of semiconductors, as well as in the chemical and petrochemical industries.

A Leading Manufacturer Of Precision Valves, Regulators & Surface Mount Components

Veriflo has maintained industry leadership over the past 95 years through innovative engineering, manufacturing and by placing a premium on quality customer care.

The division maintains two state-of-the-art Class 10 Clean Rooms at its Richmond, CA, facility and has adopted a corporate wide "Lean Manufacturing" philosophy, which is delivering greater value to the customer by eliminating wasteful steps through continuous improvement activities.

Veriflo Division's two manufacturing facilities develop and manufacture applications for the Semiconductor/High Purity and Instrument/Analyzer industries.

With the focus of maintaining the highest industry standards,

Maintained Industry Leadership By Placing A Premium On Quality Customer Care

Veriflo Division has achieved an ISO 9001 registration at both its Richmond, CA manufacturing plant and at its Carson City, NV facility. This certification confirms Veriflo's commitment to quality and excellence as recognized by the international community.

The Instrumentation Group of Parker Hannifin specializes in high quality, critical flow components for world-wide process instrumentation, ultra-high-purity, medical, analytical and biopharmaceutical applications.

Parker's Instrumentation Group has ten manufacturing plants and over 300 authorized distributor locations around the world to provide local inventory and technical support. Key markets for the Instrumentation Group include: Chemical Process, Power Generation, Oil and Gas Exploration, Semiconductor Manufacturing, Biomedical, and Analytical Equipment.

Note: For further information on Veriflo Division and or its product line visit the division web site at www.veriflo.com. For more information on Parker Hannifin Corporation visit the corporation's web site at www.parker.com.

CyMax Series

Manually & Pneumatic Operated Diaphragm Valve

VERIFLO
ISO 9001 Certified

Parker Hannifin Corporation's Veriflo Division presents the CyMax manual & pneumatic operated diaphragm valves. The patented, all welded CyMax diaphragm valve offers maximum reliability for your critical applications.

features

- Tied diaphragm for positive retraction.
- Multiple diaphragms for maximum cycle life.
- Elimination of bonnet threads provides compact valve.
- Heat code traceability on valve bodies, tube stubs and purge ports.
- Minimal PCTFE seat surface to reduce outgassing, moisture absorption and particle generation.
- Open/Close indicator standard on manual and pneumatic valves.

options

- Multiple handle colors available for gas differentiation.
- Purge Connections in VacuSeal ™, UltraSeal™ or A-LOK® compression.
- Pneumatic Actuators available with Normally Open, Double Acting and Normally Closed configurations in all sizes.
- Expanded tube ends offered for low flow applications. VacuSeal™, UltraSeal™ and Compression ends available.
- Vespel® seat optional.

materials of construction

Wetted

Body . . . . . "VeriClean", Veriflo's custom high purity type 316L Stainless Steel™
Tubing . . . . . 316L Stainless Steel
Seat . . . . . PCTFE, optional Vespel®
Diaphragm . . . . . 316L Stainless Steel,
Upper Stem . . . . . 303 Stainless Steel

Non-wetted

Cap screw. . . . . Alloy steel
Handle . . . . . Aluminum (option color coded)
Bonnet. . . . . 316L Stainless Steel
Bearing. . . . . Bronze Alloy
Driver . . . . . Bronze Alloy

operating conditions

Maximum Pressure . . . . . 275 psig (19 barg)

Maximum operating temperature:
. . . . . 230°F (110°C)

Design Leak Rate:
Inboard . . . . . 1×10^{-10} scc/sec He
Outboard . . . . . 1×10^{-5} scc/sec He
Across the seat . . . . . 1×10^{-10} scc/sec He

surface finishes

Standard Ra . . . . . 10 micro inch Ra
optional 5 Ra and 20 Ra (electropolished)

functional performance

Flow capacity . . . . . C_V 2.5

Parker Instrumentation

CyMax Series

Dimensional Drawings

PARTIAL TABULATION FOR UHP1004********BSK		
End Designator	Inlet/Outlet Connections	Length DIM "A"
M4M4	1/2" Male Face Seal	6.56 ± .12
M6M6	3/4" Male Face Seal	7.04 ± .12
F4F4	1/2" Female Face Seal	6.56 ± .12
F6F6	1/2" Female	6.56 ± .12
0404	1/2" x .049 WT Tube Stub	8.98 ± .12
0606	3/4" x .065 WT Tube Stub	7.48 ± .12

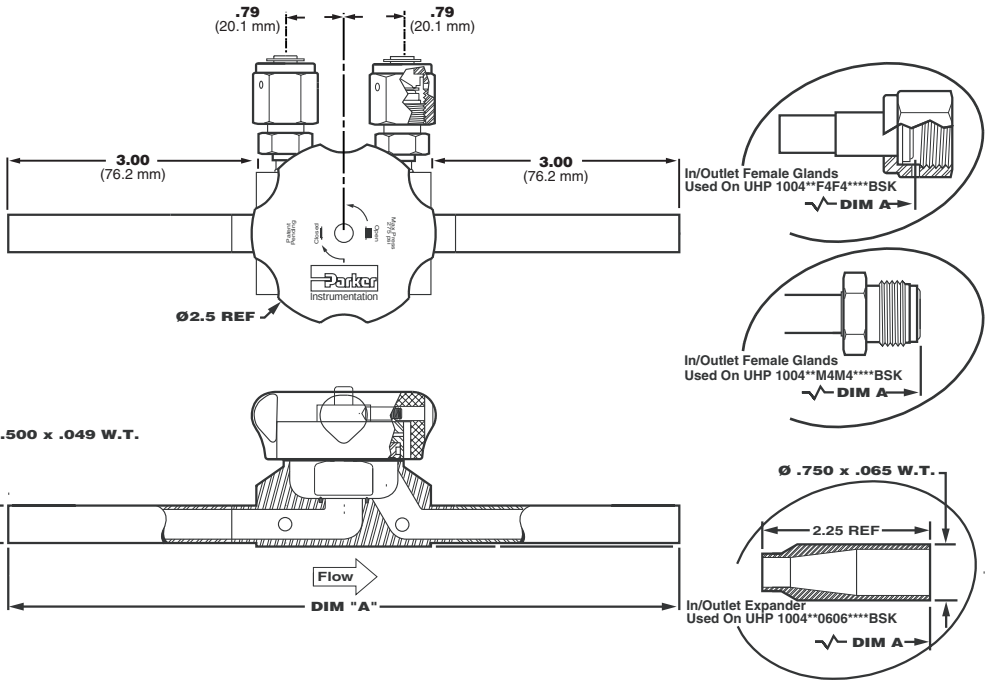

Ordering Information

UHP 10 04 C 1 04 04 10 B S K

CONFIGURATION
UHP = Straight Valve

SERIES
10 = 1000 Series

BODY SIZE
04 = 1/4"

PURGE PORT
A = None
B = Upstream
C = Up & Downstream
D = Downstream

ACTUATION

Manual (handle color)		*Pneumatic*
1 = Blue	6 = Purple	A = Fail Close Actuation
2 = Pink	7 = Black	B = Double Acting Actuation
3 = Yellow	8 = Gold	F = Fail Open Actuation
4 = Green	9 = Clear	
5 = Red	0 = White	

INLET/OUTLET TUBE SIZE & TYPE

		Optional Fitting Ends
04 = 1/2"	Tube Stub	M = Male face seal
[ ]4 = 1/2"	Optional Fitting End	F = Female face seal
06 = 3/4"	Expanded Tube Stub	C = Compression
[ ]6 = 3/4"	Optional Fitting End	Q = Male Ultra Seal
08 = 1"	Expanded Tube Stub	U = Female Ultra Seal
[ ]8 = 1"	Optional Fitting End	

SEAT SEAL MATERIALS
K = PCTFE
V = Vespel®

PURGE PORT TYPE
S = Standard VacuSeal™ Fitting
L = VacuSeal™ Fitting With Left Hand Threads
U = Standard UltraSeal™ fitting
Y = UltraSeal™ Fitting With Left Hand Threads

Note: Use "S" when no purge ports are specified

GENERATION
B = Second Generation

INTERNAL SURFACE FINISH
05 = 5 Ra
10 = 10 Ra
20 = 20 Ra (electropolished)

- **"Switch Ready" actuators are provided as standard.**
- **Non "Switch Ready" actuators are available.**
- **Metric sizes are available.**

For special configurations or options please contact factory for available.

Vespel® is a registered trademark of DuPont Company.

Parker Instrumentation

CyMax Series

Single & Duplex Integrated Component Diaphragm Valves

VERIFLO
ISO 9001 Certified

Parker Hannifin Corporation's Veriflo Division presents the CyMax Single Integrated Component Diaphragm Valves.

Integrated Components reduce the number of welds and eliminate dead legs in your UHP gas delivery system. The compact designs allow multiple drops from a single vertical or horizontal main, without restriction to flow in the main.

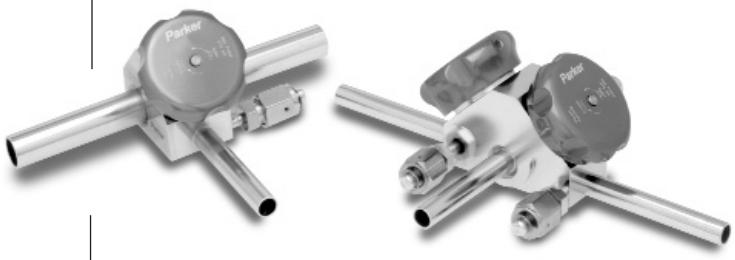

features

- Tied diaphragm for positive retraction.
- Multiple diaphragms for maximum cycle life.
- Elimination of bonnet threads provides compact valve.
- Heat code traceability on valve bodies, tube stubs and purge ports.
- Minimal PCTFE seat surface to reduce outgassing, moisture absorption and particle generation.
- Open/Close indicator standard on manual valves.

options

- Multiple handle colors available for gas differentiation.
- Purge Connections in VacuSeal ™, UltraSeal™ or A-LOK® compression.
- Expanded tube ends offered for low flow applications. VacuSeal™, UltraSeal™ and Compression ends available.
- Vespel® seat optional.

Parker Instrumentation

materials of construction

Wetted

Body . . . . . "VeriClean", Veriflo's custom high purity type 316L Stainless Steel™
Tubing . . . . . 316L Stainless Steel
Seat . . . . . PCTFE, optional Vespel®
Diaphragm . . . . . 316L Stainless Steel
Upper Stem . . . . . 303 Stainless Steel

Non-wetted

Cap screw. . . . . Alloy steel
Handle . . . . . Aluminum (option color coded)
Bonnet. . . . . 316L Stainless Steel
Bearing. . . . . Bronze Alloy
Driver . . . . . Bronze Alloy

operating conditions

Maximum Pressure . . . . . 275 psig (19 barg)

Maximum operating temperature:
. . . . . 230°F (110°C)

Design Leak Rate:
Inboard . . . . . 1×10^{-10} scc/sec He
Outboard . . . . . 1×10^{-5} scc/sec He
Across the seat . . . . . 1×10^{-10} scc/sec He

surface finishes

Standard Ra . . . . . 10 micro inch Ra
optional 5 Ra and 20 Ra (electropolished)

functional performance

. . . . . $C_V = 2.5$

CyMax Series

Dimensional Drawings

SHC

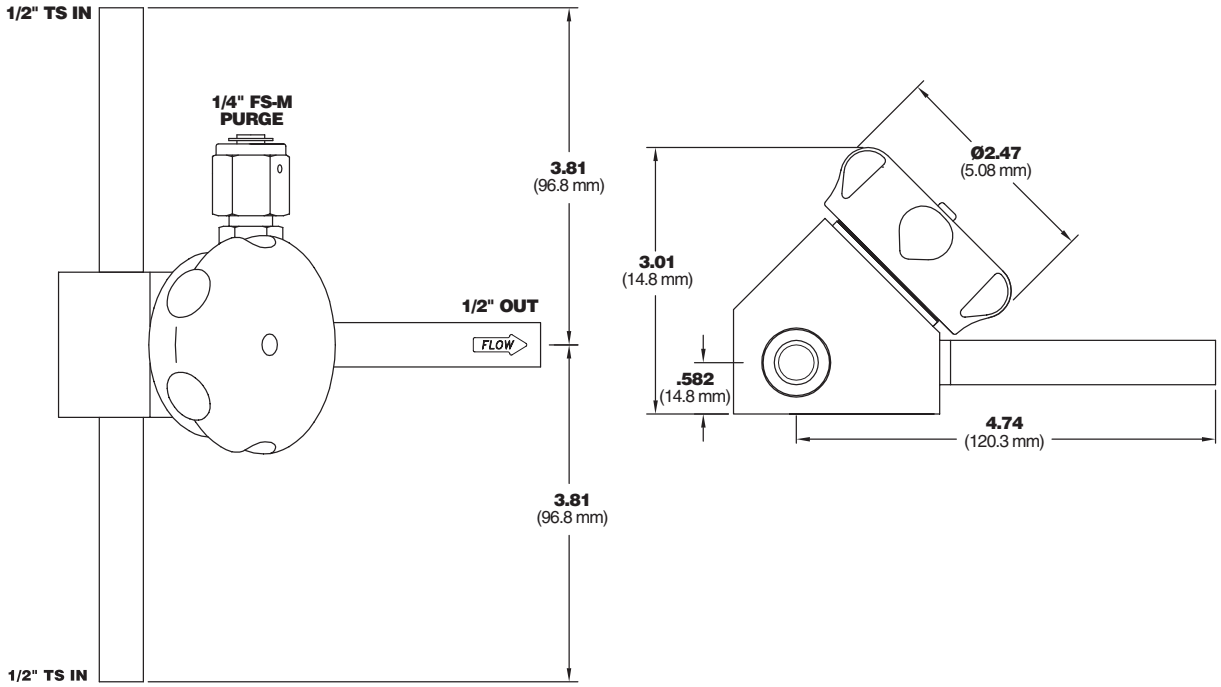

SVC

Part Number	Dim "A"	Dim "B"	Dim "C"	
			Tube Stub	Face Seal
SVC1004**04*2**BSK	0.50 Dia X 0.049 WT	0.940	6.04	4.74
SVC1004**04*4**BSK	0.50 Dia X 0.049 WT	0.940	6.04	4.83
SVC1004**06*2**BSK	0.75 Dia X 0.065 WT	0.831	6.04	4.74
SVC1004**06*4**BSK	0.75 Dia X 0.065 WT	0.831	6.04	4.83
SVC1004**08*2**BSK	1.00 Dia X 0.065 WT	0.706	6.04	4.74
SVC1004**08*4**BSK	1.00 Dia X 0.065 WT	0.706	6.04	4.83

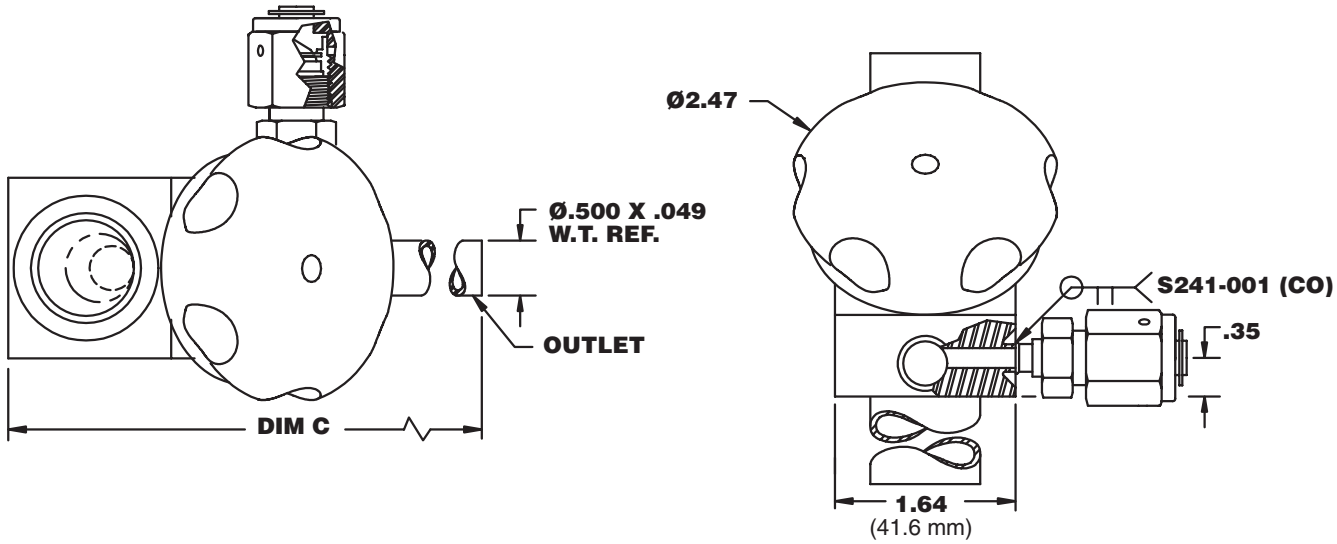

CyMax Series

Dimensional Drawings

Part Number	Dim "A"	Dim "B"	Dim "C"		Dim "D"
			Tube Stub	Face Seal	
DHC1004**04*2**BSK	0.50 Dia X 0.049 WT	0.597	9.48	6.88	3.01
DHC1004**04*4**BSK	0.50 Dia X 0.049 WT	0.597	9.88	7.46	3.01
DHC1004**06*2**BSK	0.75 Dia X 0.065 WT	0.597	9.48	6.88	3.01
DHC1004**06*4**BSK	0.75 Dia X 0.065 WT	0.597	9.88	7.46	3.01
DHC1004**0606**BSK	0.75 Dia X 0.065 WT	0.597	8.38	N/A	3.01
DHC1004**08*2**BSK	1.00 Dia X 0.065 WT	0.722	9.48	6.88	3.01
DHC1004**08*4**BSK	1.00 Dia X 0.065 WT	0.722	9.88	7.46	3.01
DHC1004**0806**BSK	1.00 Dia X 0.065 WT	0.722	8.38	N/A	3.01
DHC1004**12*4**BSK	1.50 Dia X 0.065 WT	1.130	10.28	7.86	3.65
DHC1004**1206**BSK	1.50 Dia X 0.065 WT	1.130	8.78	N/A	3.65
DHC1004**16*4**BSK	2.00 Dia X 0.065 WT	1.325	10.28	7.86	3.65
DHC1004**1606**BSK	2.00 Dia X 0.065 WT	1.325	8.78	N/A	3.65

DHC

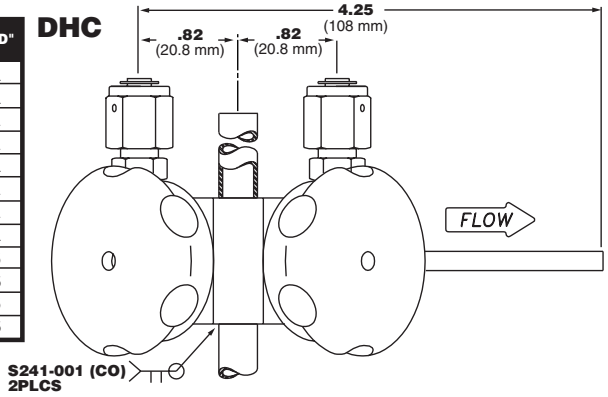

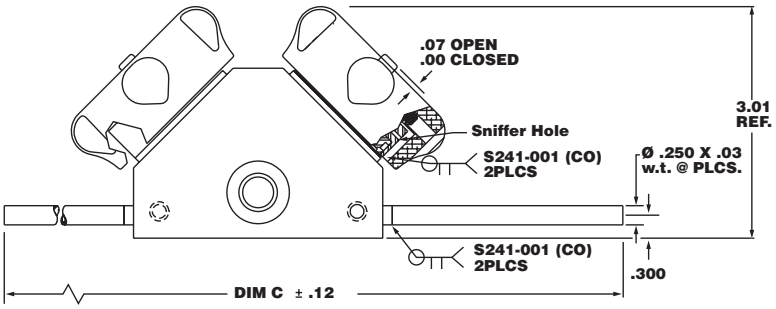

DVT

Part Number	Dim "A"	Dim "B"	Dim "C"		Dim "D"
			Tube Stub	Face Seal	
DVT1004**04*2**BSK	0.50 Dia X 0.049 WT	1.640	9.48	6.88	3.01
DVT1004**04*4**BSK	0.50 Dia X 0.049 WT	1.640	9.88	7.46	3.01
DVT1004**06*2**BSK	0.75 Dia X 0.065 WT	1.640	9.48	6.88	3.01
DVT1004**06*4**BSK	0.75 Dia X 0.065 WT	1.640	9.88	7.46	3.01
DVT1004**08*2**BSK	1.00 Dia X 0.065 WT	1.640	9.48	6.88	3.01
DVT1004**08*4**BSK	1.00 Dia X 0.065 WT	1.640	9.88	7.46	3.01
DVT1004**12*4**BSK	1.50 Dia X 0.065 WT	1.900	9.88	7.46	3.01

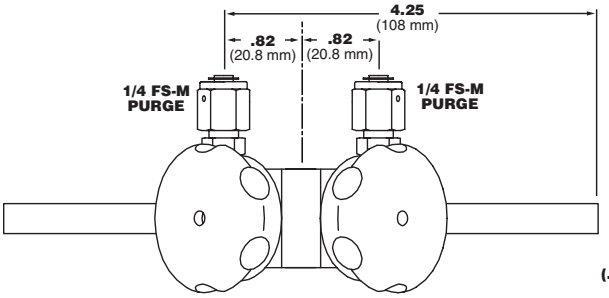

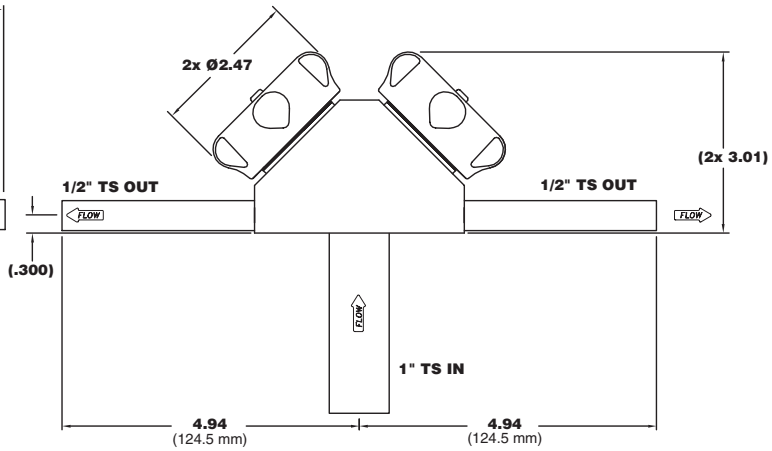

CyMax Series

Ordering Information

SHC 10 04 D 1 04 02 10 B S K

CONFIGURATION
SHC = Single Horizontal Cross
SVC = Single Vertical Cross
DHC = Duplex Horizontal Cross
DHT = Duplex Horizontal Tee
DVT = Duplex Vertical Cross

SERIES
10 = 1000 Series

BODY SIZE
04 = 1/4”

PURGE PORT
A = None
D = 1/4" Downstream VacuSeal™

ACTUATION
Manual (handle color)

1 = Blue	6 = Purple
2 = Pink	7 = Black
3 = Yellow	8 = Gold
4 = Green	9 = Clear
5 = Red	0 = White

INLET SIZE & TYPE
04 = 1/2” Tube Stubs
06 = 3/4” Tube Stubs
08 = 1” Tube Stubs
12 = 1-1/2” Tube Stubs
16 = 2” Tube Stubs

OUTLET SIZE & TYPE
02 = 1/4” Tube Stubs
[ ]2 = 1/4” Optional Fitting End
04 = 1/2” Tube Stub
[ ]4 = 1/2” Optional Fitting End
06 = 3/4” Expanded Tube Stub
[ ]6 = 3/4” Optional Fitting End

Optional Fitting Ends
M = Male VacuSeal™
F = Female VacuSeal™
C = Compression
Q = Male UltraSeal™
U = Female UltraSeal™

SEAT SEAL MATERIALS
K = PCTFE
V = Vespel®

PURGE PORT TYPE
S = Standard VacuSeal™ Fitting
L = VacuSeal™ Fitting With Left Hand Threads
U = Standard UltraSeal™ fitting
Y = UltraSeal™ Fitting With Left Hand Threads

Note: Use "S" when no purge ports are specified

GENERATION
B = Second Generation

INTERNAL SURFACE FINISH
05 = 5 Ra
10 = 10 Ra
20 = 20 Ra (electropolished)

• Metric sizes are available.

For special configurations or options please contact factory for available.

Vespel® is a registered trademark of DuPont Company.

Parker Instrumentation

CvMax Series

Manual & Pneumatic Operated Bellows Valve

VERIFLO
ISO 9001 Certified

Parker Hannifin Corporation's Veriflo Division presents the CvMax 600 Series Bellows Valves. These valves are manufactured specifically for Ultra High Purity Gas Systems.

Parker Bellows Valves are designed with the industry's leading straight-through full flow. There are no restricted paths or bends that would reduce flow and generate particulate. These features provide the highest gas flow with minimal pressure drop.

features

- Multi-Ply Inconel 625 bellows for maximum cycle life in a small envelope.
- Minimal PCTFE to reduce outgassing and moisture absorption.
- Heat code traceability on valve bodies, tube stubs and purge ports.
- Non-Rising handwheel for optimal clearance.
- Open/Close Indicators on manual valve.
- Optimum purge port location.

options

- Multiple handle colors available for gas differentiation.
- Purge Connections in VacuSeal ™, UltraSeal™ or A-LOK® compression.
- Multiple Pneumatic Actuators available on most sizes (contact factory).
- Expanded tube ends offered for low flow applications.
- Vespel® seat optional.

Parker Instrumentation

materials of construction

Wetted

Body . . . . . "VeriClean", Veriflo's custom high purity type 316L Stainless Steel™
Tube Ends . . . . . 316L Stainless Steel
Stem . . . . . 316L Stainless Steel
Seat Holder. . . . . 316L Stainless Steel
Bellows Adapter. . . . . 316L Stainless Steel
Bellows . . . . . Inconel®
Seat . . . . . PCTFE, optional Vespel®
Bonnet Gasket . . . . . Nickel

Non-wetted

Handle . . . . . Aluminum
Interior Stem. . . . . 300 Series Stainless Steel or 17-4 Stainless Steel
Driver . . . . . Bronze
Guide . . . . . Brass
Bonnet . . . . . Aluminum or 316 Series Stainless Steel

operating conditions

Maximum Pressure . . . . . 375 psig (25.9 barg)
Minimum operating pressure. . . . . Vaccum

Maximum operating temperature:
Closed . . . . . 140°F (60°C)
Open . . . . . 230°F (110°C)

Design Leak Rate:
Inboard . . . . . 1×10^{-10} scc/sec He
Outboard . . . . . 1×10^{-5} scc/sec He
Across the seat . . . . . 1×10^{-10} scc/sec He

surface finishes

Standard Ra . . . . . 10 micro inch Ra
optional 5 Ra and 20 Ra (electropolished)

functional performance

Flow capacity . . . . . see Dimensional Drawings

CvMax Series

Dimensional Drawings

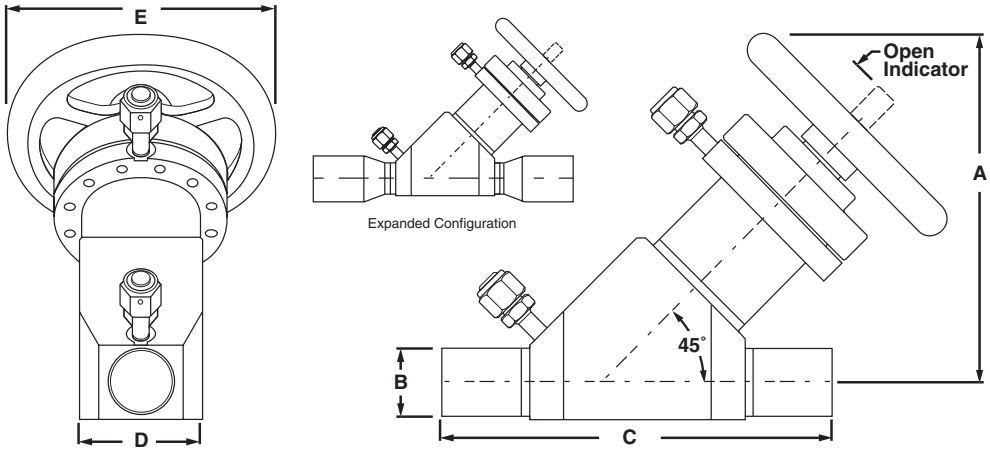

Part Number	C_V	Xt	A (Height) Inch	A (Height) mm	B(Tube O.D.) Inch	B(Tube O.D.) mm	B(Tube Wall) Inch	B(Tube Wall) mm	C(Length) Inch	C(Length) mm	D(Body Width) Inch	D(Body Width) mm	E(Handle Dia.) Inch	E(Handle Dia.) mm	Body Tube Inch	Body Tube mm	Straight Expanded
UHP0608**0808**ASK	35	.236	5.7	144	1.00	25.4	0.065	1.65	10.1	257	2.00	51	3.75	95	1.00	25.4	St
UHP0608**1212**ASK	28	.319	5.7	144	1.50	38.1	0.065	1.65	12.1	308	2.00	51	3.75	95	1.00	25.4	Ex
UHP0612**1212**ASK	81	.241	8.0	203	1.50	34.1	0.065	1.65	16.11	409	3.12	74	6.00	152	1.50	38.1	St
UHP0612**1616**ASK	91	.183	8.0	203	2.00	50.8	0.065	1.65	16.11	409	3.12	79	6.00	152	1.50	38.1	Ex
UHP0616**1616**ASK	178	.193	10.3	261	2.00	50.8	0.065	1.65	13.9	353	3.67	93	8.00	203	2.00	50.8	St
UHP0616**2424**ASK	134	.225	14.0	356	3.00	76.2	0.065	1.65	17.1	435	3.67	93	8.00	203	2.00	50.8	Ex
UHP0624**2424**ASK	413	.183	14.0	356	3.00	76.2	0.065	1.65	15.5	394	5.60	142.2	10.00	254	3.00	76.2	St
UHP0624**3232**ASK	354	.240	14.1	358	4.00	101.6	0.083	2.11	18.5	470	5.60	142.2	10.00	254	3.00	76.2	Ex
UHP0636**3232**ASK	779	.189	19.5	495	4.00	101.6	0.083	2.11	20.4	518	8.00	203.2	14.00	356	4.00	101.6	St
UHP0636**4848**ASK	814	.307	22.4	569	6.00	152.4	0.109	2.77	26.3	668	8.00	203.2	14.00	356	4.50	114.3	Ex

Note: C_V and Xt calculated per SEMI Flow Coefficient Standard Test Method

Ordering Information

UHP 06 08 C 1 08 08 10 A S K

CONFIGURATION
UHP = Straight Valve

SERIES
06 = 600 Series

BODY SIZE
08 = 1”
12 = 1 1/2”
16 = 2”
24 = 3”
36 = 4 1/2

PURGE PORT
A = None
B = Upstream
C = Up & Downstream
D = Downstream
J = Purge Valves Up & Downstream

ACTUATION

Manual (handle color)		*Pneumatic*
1 = Blue	6 = Purple	A = Fail Close Actuation
2 = Pink	7 = Black	B = Double Acting Actuation
3 = Yellow	8 = Gold	F = Fail Open Actuation
4 = Green	9 = Clear	
5 = Red	0 = White	

INLET/OUTLET TUBE SIZE & TYPE

			Optional Fitting Ends
08	= 1”	Tube Stub	M = Male face seal
[ ]8	= 1”	Optional Fitting End	F = Female face seal
12	= 1.5”	Expanded Tube Stub	C = Compression
[ ]12	= 1.5”	Optional Fitting End	Q = Male Ultra Seal
16	= 2”	Expanded Tube Stub	U = Female Ultra Seal
[ ]16	= 2”	Optional Fitting End	
24	= 3”	Expanded Tube Stub	
[ ]24	= 3”	Optional Fitting End	
32	= 4”	Expanded Tube Stub	
[ ]32	= 4”	Optional Fitting End	
48	= 4”	Expanded Tube Stub	
[ ]48	= 4”	Optional Fitting End	

SEAT SEAL MATERIALS
K = PCTFE
V = Vespel®

PURGE PORT TYPE
S = Standard face seal fitting
L = Face seal fitting with left hand threads
U = Ultra seal fitting
Y = Ultra seal fitting with left hand threads

Note: Use "S" when no purge ports are specified

GENERATION
A = First Generation

INTERNAL SURFACE FINISH
05 = 5 Ra
10 = 10 Ra
20 = 20 Ra (electropolished)

- **"Switch Ready" actuators are provided as standard.**
- **Non "Switch Ready" actuators are available.**
- **Metric sizes are available.**

For special configurations or options please contact factory for available.

Vespel® is a registered trademark of DuPont Company.

Parker Instrumentation

500 Series

Single & Duplex Integrated Component Bellows Valve

VERIFLO
ISO 9001 Certified

Parker Hannifin Corporation's Veriflo Division presents the 500 Series Single Integrated Component Bellows Valves.

Integrated Components reduce the number of welds and eliminate dead legs in your UHP gas delivery system. The compact designs allow multiple drops from a single vertical or horizontal main, without restriction to flow in the main.

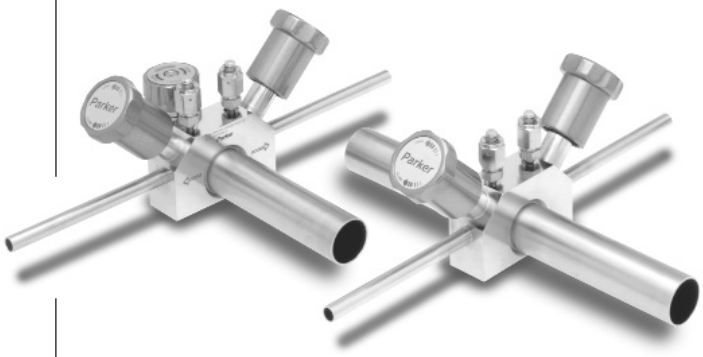

features

- Multi-Ply Inconel 625 bellows for maximum cycle life in a small envelope.
- Minimal PCTFE to reduce outgassing and moisture absorption.
- Heat code traceability on valve bodies, tube stubs and purge ports.
- Non-Rising handwheel for optimal clearance
- Open/Close Indicators on manual valve.
- Optimum purge port location.

options

- Multiple handle colors available for gas differentiation.
- Purge Connections in VacuSeal ™, UltraSeal™ or A-LOK® compression.
- Multiple Pneumatic Actuators available on most sizes (contact factory).
- Expanded tube ends offered for low flow applications.

Parker Instrumentation

materials of construction

Wetted

Body . . . . . "VeriClean", Veriflo's custom high purity type 316L Stainless Steel™
Tube Ends . . . . . 316L Stainless Steel
Stem . . . . . 316L Stainless Steel
Seat Holder. . . . . 316L Stainless Steel
Bellows Adapter. . . . . 316L Stainless Steel
Bellows . . . . . Inconel®
Seat . . . . . PCTFE
Bonnet Gasket . . . . . Nickel

Non-wetted

Handle. . . . . Aluminum
Interior Stem. . . . . 300 Series Stainless Steel or 17-4 Stainless Steel
Driver . . . . . Bronze
Guide . . . . . Brass
Bonnet . . . . . Aluminum or 316 Series Stainless Steel

operating conditions

Maximum Pressure . . . . . 250 psig (17.2 barg)
Minimum operating pressure. . . . . Vacuum

Maximum operating temperature:
. . . . . 212°F (100°C)

Design Leak Rate:
Inboard . . . . . 1×10^{-10} scc/sec He
Outboard . . . . . 1×10^{-5} scc/sec He
Across the seat . . . . . 1×10^{-10} scc/sec He

surface finishes

Standard Ra . . . . . 10 micro inch Ra
optional 5 Ra and 20 Ra (electropolished)

functional performance

Flow capacity:
UHP504. . . . . $C_V = 15$
UHP506. . . . . $C_V = 20$

500 Series

Dimensional Drawings

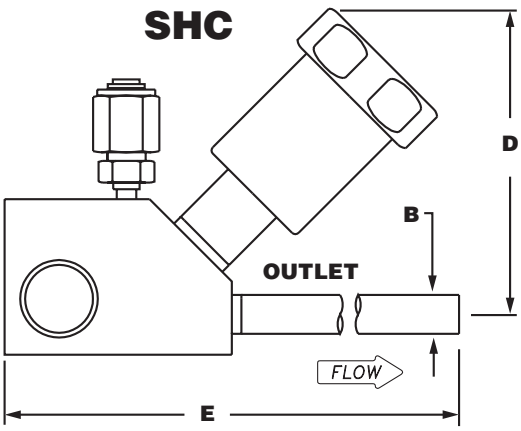

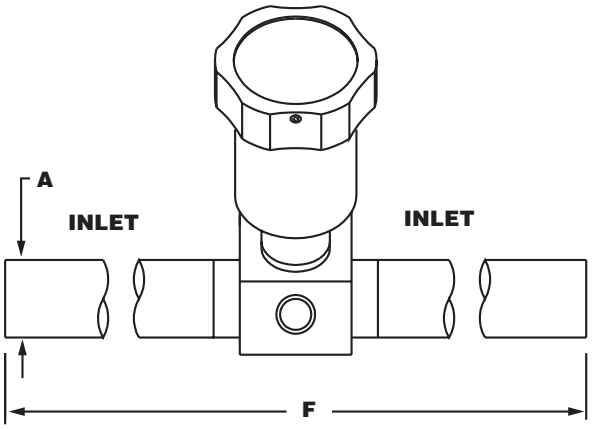

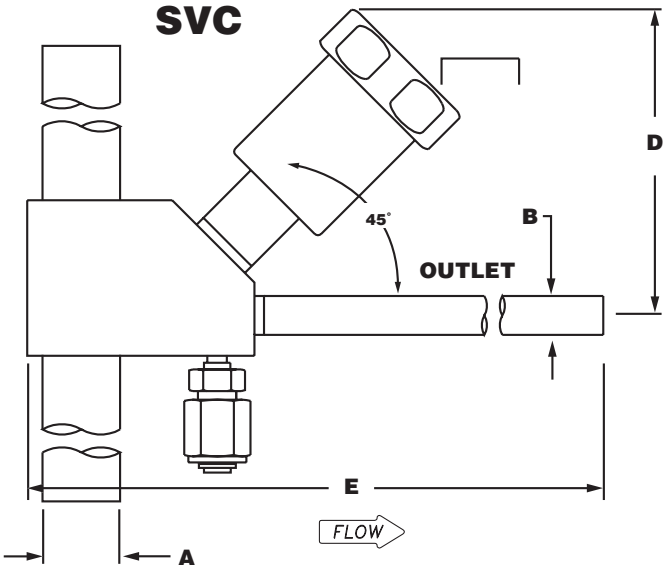

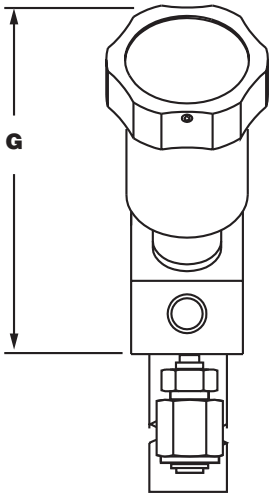

Part Number (SVC and SHC)	A (size x wall)	B (size x wall)	C (open/close)	D (open/close)	E (SVC/SHC)	F (SHC)	G (SVC)	Straight or Tube Exp.
504**0404-*	0.50 x .049	0.50 x .049	5.2/4.6	4.3/3.9	8.5	12.4	13.0	Straight
504**0604-*	0.75 x .065	0.50 x .049	5.2/4.6	4.3/3.9	8.5	12.4	13.0	Straight
504**0804-*	1.00 x .065	0.50 x .049	5.2/4.6	4.3/3.9	8.5	12.4	13.0	Straight
504**0806-*	1.00 x .065	0.75 x .065	5.2/4.6	4.3/3.9	9.8	12.4	13.0	Tube Exp.
504**0808-*	1.00 x .065	1.00 x .065	5.2/4.6	9.5/8.6	10.4	13.4	13.9	Straight
504**1208-*	1.50 x .065	1.00 x .065	11.5/10.3	9.5/8.6	10.4	14.4	14.9	Straight
504**1608-*	2.00 x .065	1.00 x .065	11.5/10.3	9.5/8.6	10.4	14.4	14.9	Straight

Note: Metric tube sizes and wall thickness available upon request.
Tube stub expanders and pneumatic actuation available.
Larger valve bodies and end connections available.
Dimensions in inches.

500 Series

Dimensional Drawings

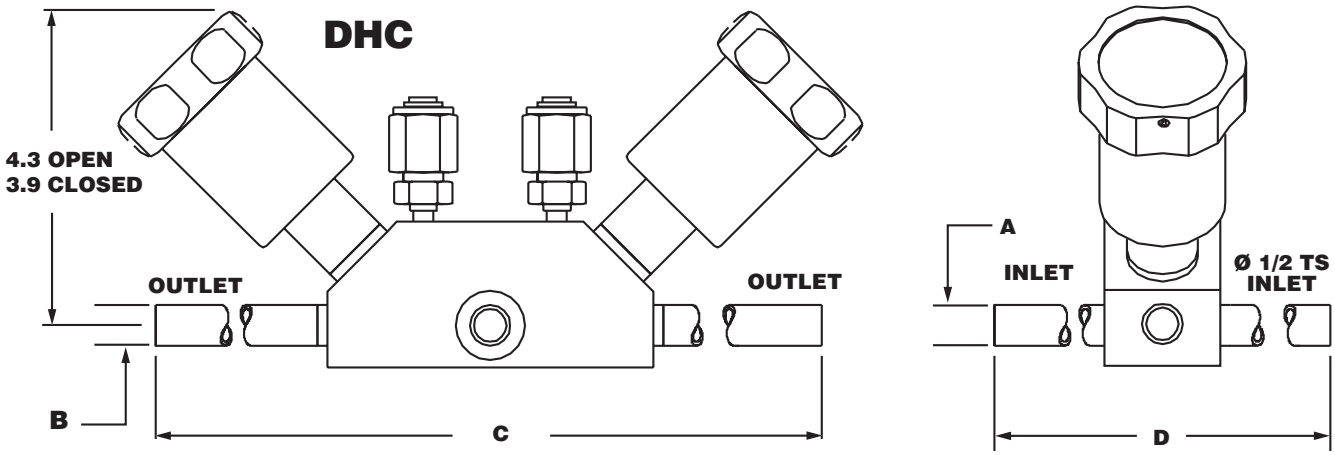

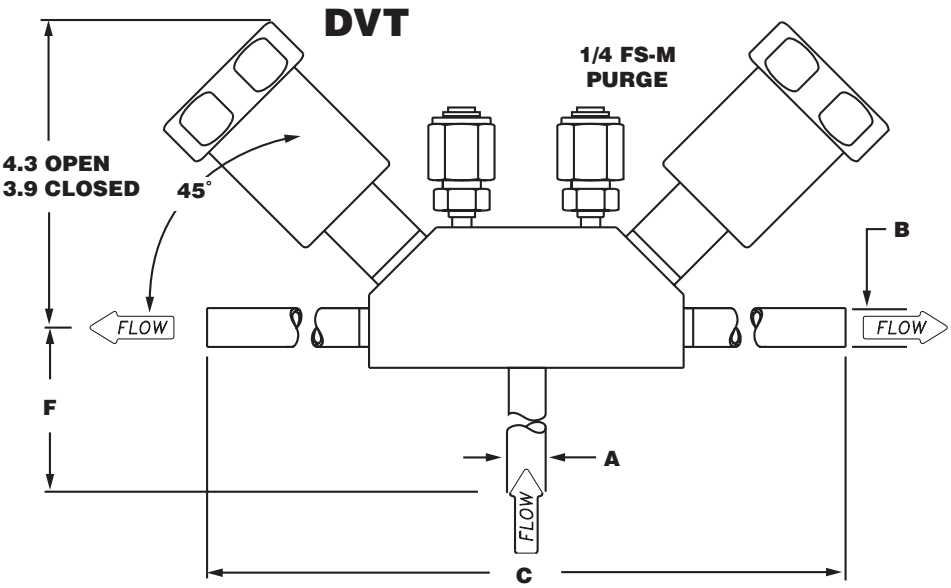

Part Number (DHC, DHT and DVT)	A (size x wall)	B (size x wall)	C	D (DHC)	E (DHT)	F (DVT)	Straight or Tube Exp.
504**0404-*	0.50 x .049	0.50 x .049	15.3	12.4	6.9	6.0	Straight
504**0604-*	0.75 x .065	0.50 x .049	15.3	12.4	6.9	6.0	Straight
504**0804-*	1.00 x .065	0.50 x .049	15.3	12.4	6.9	6.0	Straight
504**0806-*	1.00 x .065	0.75 x .065	17.7	12.4	6.9	6.0	Tube Exp.
504**1204-*	1.50 x .065	0.50 x .049	15.3	13.4	7.4	NA	Straight
504**1206-*	1.50 x .065	0.75 x .065	17.7	13.4	7.4	NA	Tube Exp.
504**1604-*	2.00 x .065	0.50 x .049	15.5	13.4	7.4	NA	Straight
504**1606-*	2.00 x .065	0.75 x .065	18.0	13.4	7.4	NA	Tube Exp.

Note: Metric tube sizes and wall thickness available upon request. Tube stub expanders and pneumatic actuation available. Larger valve bodies and end connections available. Dimensions in inches.

500 Series

Ordering Information

SHC 5 04 M 1 04 04 - 10

CONFIGURATION
SHC = Single Horizontal Cross
SVC = Single Vertical Cross
DHC = Duplex Horizontal Cross
DHT = Duplex Horizontal Tee
DVT = Duplex Vertical Cross

SERIES
5 = 500 Series

BODY SIZE
04 = 1/4”

PURGE PORT
A = None
M = 1/4" Male Downstream VacuSeal™
F = 1/4" Female Downstream VacuSeal™

ACTUATION
Manual (handle color)

1 = Blue	6 = Purple
2 = Pink	7 = Black
3 = Yellow	8 = Gold
4 = Green	9 = Clear
5 = Red	0 = White

INTERNAL SURFACE FINISH
05 = 5 Ra
10 = 10 Ra
20 = 20 Ra (electropolished)

OUTLET SIZE & TYPE
02 = 1/4” Tube Stubs
[ ]2 = 1/4” Optional Fitting End
04 = 1/2” Tube Stub
[ ]4 = 1/2” Optional Fitting End
06 = 3/4” Expanded Tube Stub
[ ]6 = 3/4” Optional Fitting End

Optional Fitting Ends
M = Male VacuSeal™
F = Female VacuSeal™
C = Compression
Q = Male UltraSeal™
U = Female UltraSeal™

INLET SIZE & TYPE
04 = 1/2” Tube Stubs
06 = 3/4” Tube Stubs
08 = 1” Tube Stubs
12 = 1-1/2” Tube Stubs
16 = 2” Tube Stubs

For special configurations or options please contact factory for available.

Parker Instrumentation

QUANTUM 935

1/2" Valve

VERIFLO
ISO 9001 Certified

Parker Hannifin Corporation's Veriflo Division presents the 935 Series 1/2" valve. The 935 provides superior control of gases and liquids under high flow, low pressure conditions where absolute purity is essential. The 935 is a "positive retraction" diaphragm valve — an engineered feature which has reduced the surface area and entrapment potential inherent in bellows valves.

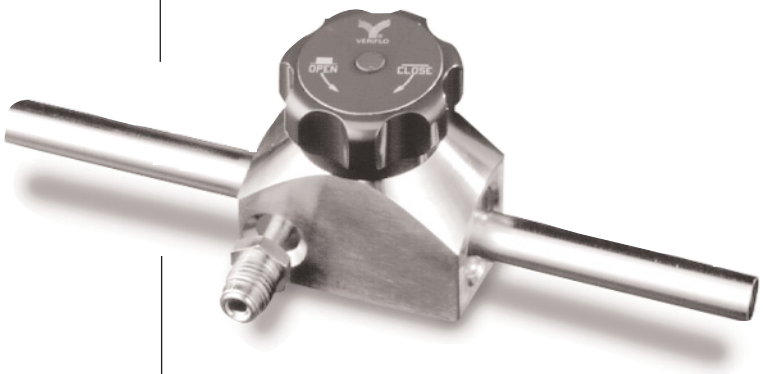

There are no springs or retaining clips in the gas stream. This pure design yields a valve with neither entrapment zones nor particle generating surfaces.

The body of the 935 valve is machined from "Vericlean", Veriflo's low sulfur 316L Stainless Steel™. This proprietary alloy has a higher level of corrosion resistance than either cast or forged metals and provides maximum system integrity and superior surface finishes with enhanced electropolishing. A 10 micro inch Ra or less (.25 micro meter) finish is standard on the 935 and a 5 micro inch or less Ra, (.13 micron) finish is available as an option.

materials of construction

Wetted

Body . . . . . "VeriClean", Veriflo's custom high purity type 316L Stainless Steel™

Diaphragm . . . . . 316L Stainless Steel

Seal . . . . . PCTFE, optional Vespel®

Non-wetted

Knob (Blue) . . . . . Aluminum

Stem . . . . . 416 Stainless Steel

Bushing. . . . . Aluminum Silicon Bronze

operating conditions

Maximum operating pressure . . . . . 300 psig (21 barg)

Minimum operating pressure . . . . . Vacuum

Temperature:

PCTFE . . . . . -40°F to 150°F (-40°C to 66°C)

Vespel® . . . . . -40°F to 350°F (-40°C to 177°C)

Bake out (in open position):

PCTFE. . . . . 250°F(121°C)

Vespel® . . . . . 350°F(177°C)

functional performance

Flow capacity . . . . . C_V= 2.8 (orifice size = .5") (SEMI Flow Coefficient Test #F-32-0998)

Design Proof Pressure . . . . . 450 psig (31 barg)

Design Burst Pressure . . . . . 900 psig (62 barg)

Design Leak Rate:

Outboard . . . . . 2×10^{-9} scc/sec He

Inboard . . . . . 2×10^{-10} scc/sec He

Across seat . . . . . 4×10^{-9} scc/sec He

internal volume

16.2 cc

standard configurations

See ordering information.

surface finishes

Standard . . . . . 10 Ra micro inch (.25 micro meter) or less

Optional . . . . . EV= 5 Ra micro inch (.13 micro meter) or less

Parker Instrumentation

QUANTUM 935

Construction

The 935 diagram (Fig.1) illustrates the minimal number of wetted parts in this "positive retraction" style valve. The standard seat is PCTFE, with Vespel® available as an option.

Diaphragm Assembly

The heart of the 935 is the diaphragm assembly, to which a seal carrier has been laser-welded. The diaphragm creates a metal-to-metal seal to the body, the only seal to atmosphere other than the port connection. The seal carrier is connected to the knob stem for positive retraction. The domed diaphragm design allows for maximum stroke while maintaining low stress on the diaphragm weld area.

Features

- "Vericlean", Veriflo's low sulfur high purity 316L material which enhances electropolishing, welding, and corrosion resistance
- Internally threadless and springless
- Fully functional from a vacuum to 300 psig (20.7 barg)
- Aerodynamic, fully swept flow passages
- Minimum particle generation and particle entrapment areas
- 100% Helium leak tested
- "Hurricane" cleaning, Veriflo's standard proprietary cleaning process, removes metallic ions, organic films and surface adhering particles

Flow Curve

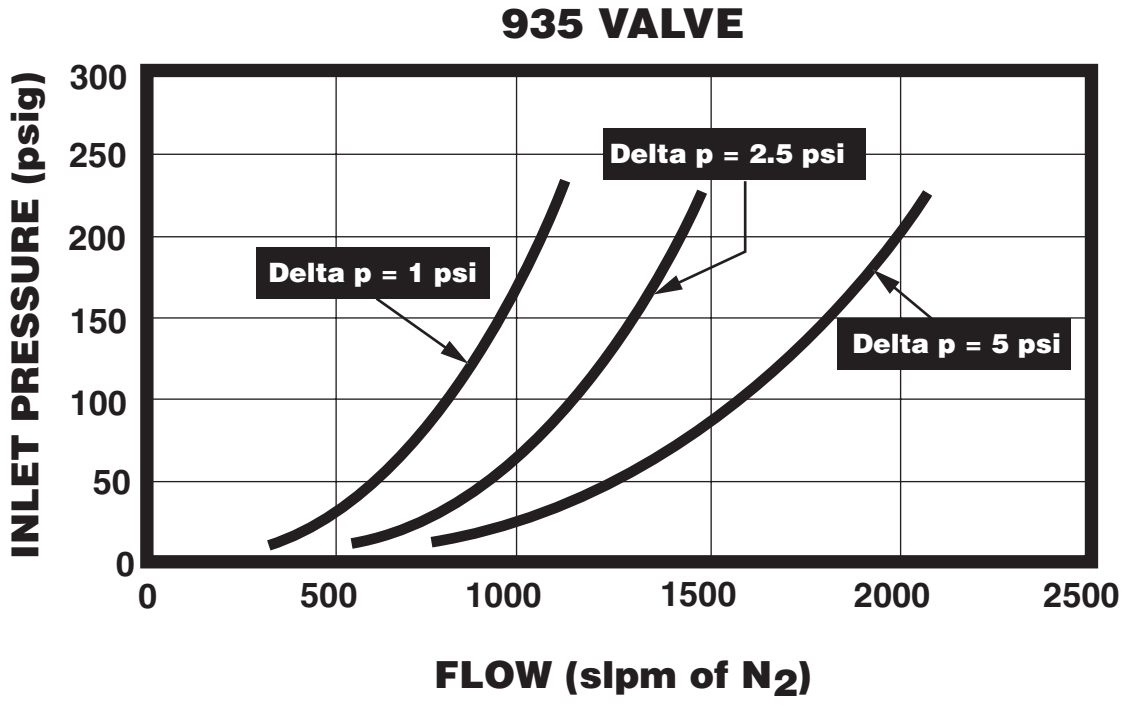

Parker Instrumentation

QUANTUM 935

Cross Sectional Drawings

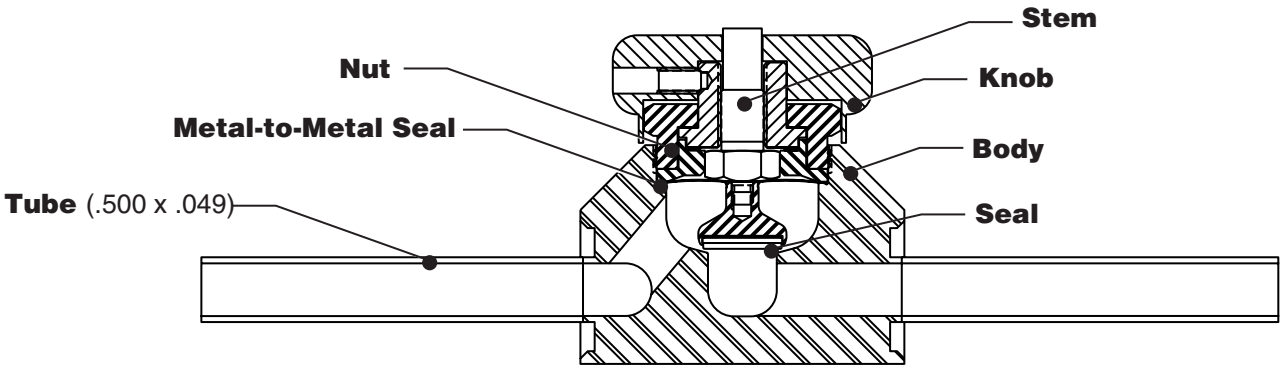

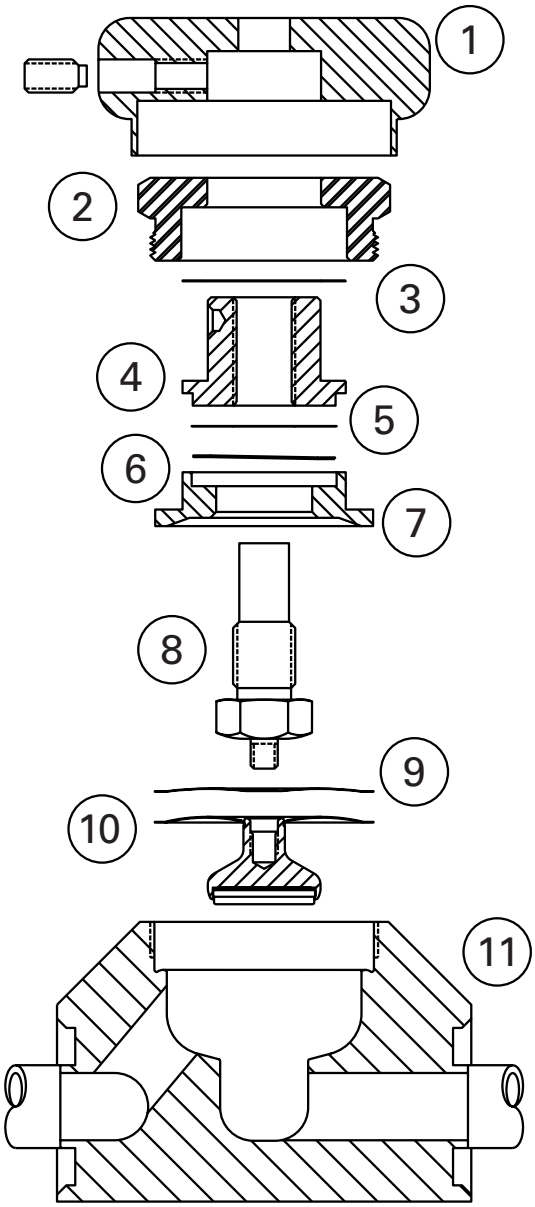

List of Components

1. Knob
2. Nut
3. Washer
4. Bushing
5. Bearing plate
6. Wave spring washer
7. Diaphragm plate
8. Stem
9. Backup Diaphragm
10. Welded diaphragm/seat assembly
11. Body - "VeriClean" 316L Stainless Steel

Fig.1

QUANTUM 935

Cross Sectional Drawings

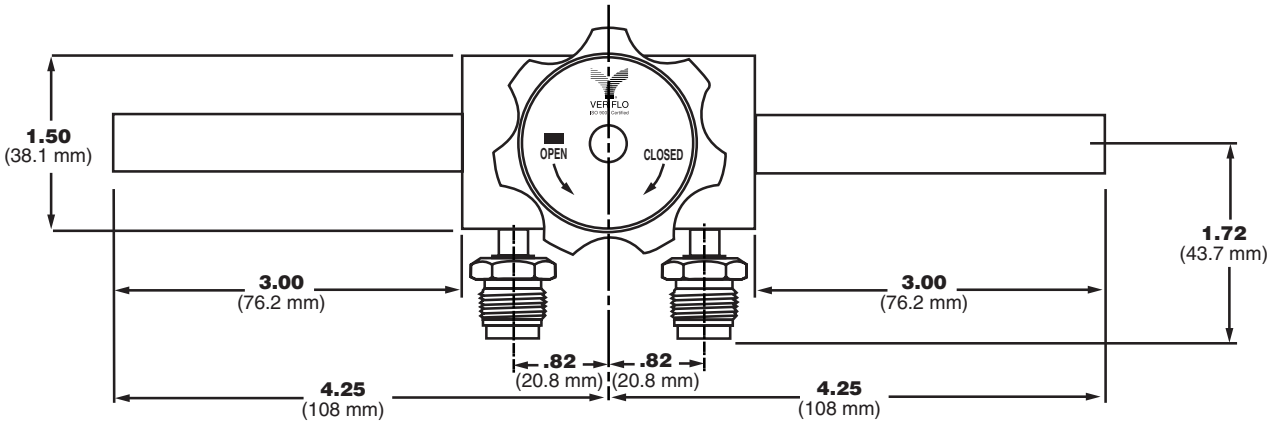

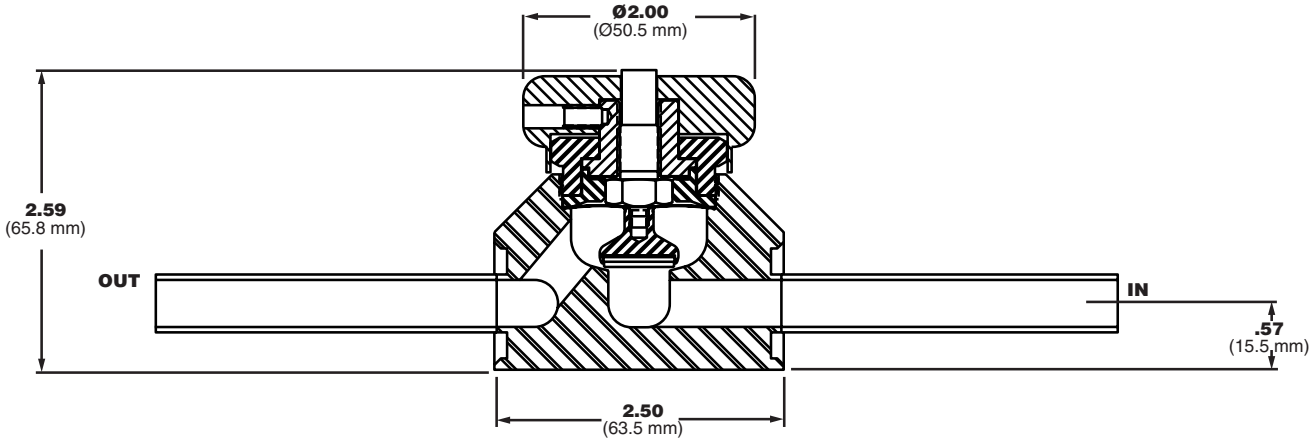

Ordering Information

935 FS8 MM P2 FSM VESP

BASIC SERIES
935

CONNECTIONS

TS	=	1/4" Tube
TS6	=	3/8" Tube
TS8	=	1/2" Tube
TS12	=	3/4" Tube
TS16	=	1.0" Tube
TS12MM	=	12 mm x 1 mm x 76 mm Tube*
TS18MM	=	18 mm x 1.5 mm x 76 mm Tube*
FS	=	1/4" Face Seal
FS8	=	1/2" Face Seal
FS12	=	3/4" Face Seal

PORT CONFIGURATION
M = Male
F = Female

OPTIONAL FEATURES
VESP = Vespel® Seat**
C1 = Purge Port capped and leak tested-per port
C2 = Face Seal Outlet port capped and leak tested

PURGE PORT CONNECTIONS
FSM =1/4" Face Seal Male
FSF =1/4" Face Seal Female

PURGE PORT LOCATIONS
P1 = Outlet Side
P2 = Inlet and Outlet
P3 = Inlet Side
XY = No purge port

* **mm is a measurement in milimeters.**
** **Recommended for Nitrous Oxide ($N_2$0) Service**
NOTE: Different colored knobs are available upon request. Contact factory for available colors.

Vespel® is a registered trademark of DuPont Company.

Parker Instrumentation

QUANTUM 935T

1/2" Valve

VERIFLO
ISO 9001 Certified

Parker Hannifin Corporation's Veriflo Division presents the 935T Series (horizontal cross) 1/2" valve. The 935T provides superior control of gases and liquids under high flow, low pressure conditions where absolute purity is essential. The 935T is a "positive retraction" diaphragm valve — an engineered feature which has reduced the surface area and entrapment potential inherent in bellows valves.

There are no springs or retaining clips in the gas stream. This pure design yields a valve with neither entrapment zones nor particle generating surfaces.

features

- "Vericlean", Veriflo's low sulfur high purity 316L material which enhances electropolishing, welding, and corrosion resistance.
- Internally threadless and springless.
- Fully functional from a vacuum to 300 psig (21 barg).
- Aerodynamic, fully swept flow passages.
- Minimum particle generation and particle entrapment areas.
- 100% Helium leak tested.
- "Hurricane" cleaning, standard proprietary cleaning process, removes metallic ions, organic films and surface adhering particles.

materials of construction

Wetted

Body . . . . . "VeriClean", Veriflo's high purity type 316L VAR Stainless Steel™
Diaphragm . . . . . 316L VAR Stainless Steel
Seal . . . . . PCTFE, optional Vespel®

Non-wetted

Knob . . . . . Aluminum
Stem . . . . . 416 Stainless Steel
Bushing. . . . . Aluminum Silicon Bronze

operating conditions

Maximum operating pressure . . . . . 300 psig (21 barg)
Minimum operating pressure . . . . . Vacuum

Temperature:
PCTFE . . . . . -40° F to 150° F (-40° C to 65° C)
Vespel® . . . . . -40° F to 350° F (-40° C to 177° C)

Bake out (in open position)
PCTFE . . . . . 250°F (121° C)
Vespel® . . . . . 350°F (177° C)

functional performance

Flow capacity . . . . . C_V= 2.8 (orifice size = .5") (SEMI Flow Coefficient Test #F-32-0998)

Design Proof Pressure . . . . . 450 psig (31 barg)
Design Burst Pressure . . . . . 900 psig (62 barg)

Design Leak Rate:
Outboard . . . . . 2×10^{-9} scc/sec He
Inboard . . . . . 2×10^{-10} scc/sec He
Across seat . . . . . 4×10^{-9} scc/sec He

standard configurations

See ordering information.

surface finishes

Standard . . . . . 10 Ra micro inch (.25 micro meter) or less
Optional . . . . . EV = 5 Ra micro inch (.13 micro meter) or less

Parker Instrumentation

QUANTUM 935T

Dimensional Drawings

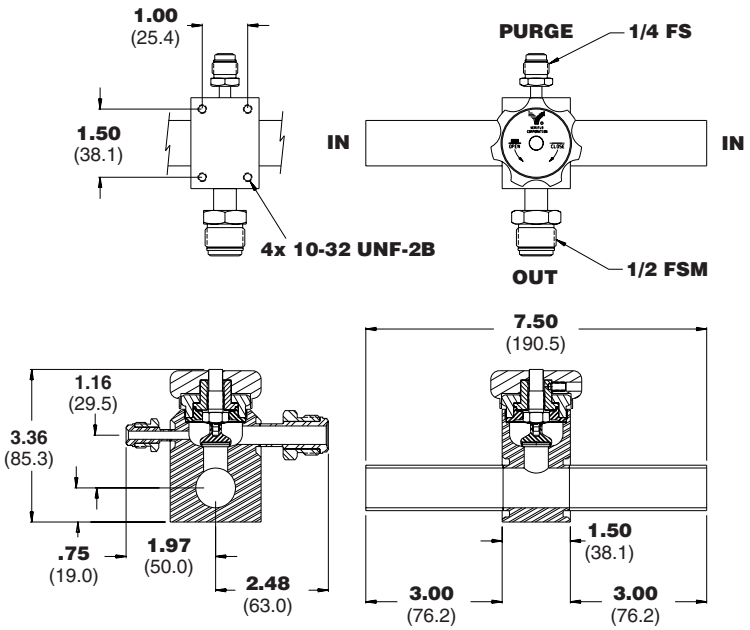

Flow Curve

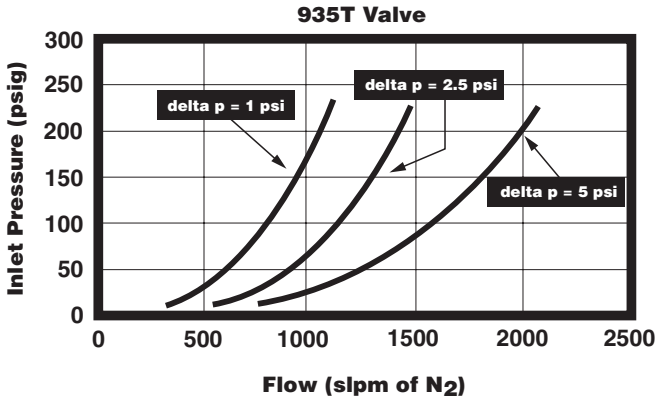

Ordering Information

935T FS8 M FS8 M P1 FSM VESP

BASIC SERIES
935T

INLET CONNECTIONS
FS = 1/4" Face Seal
FS8 = 1/2" Face Seal
TS6 = 3/8"Tube
TS8 = 1/2" Tube
TS12 = 3/4" Tube
TS16 = 1" Tube
TS24 = 1.5" Tube

FACE SEAL STYLE
M = Male
F = Female

OUTLET CONNECTION
FS = 1/4" Face Seal
FS8 = 1/2" Face Seal
TS6 = 3/8"Tube
TS8 = 1/2" Tube
TS12 = 3/4" Tube
TS16 = 1" Tube
TS24 = 1.5" Tube

OPTIONAL FEATURES
VESP = Vespel® Seat*
C1 = Purge Port capped and leak tested per port
C2 = Outlet Face Seal port Capped and leak tested

PURGE PORT CONNECTION
FSM = 1/4" Face Seal
FSF = 1/4" Face Seal

PURGE PORT LOCATION
P1 = Outlet Side**

FACE SEAL STYLE
M = Male
F = Female

*** Recommended for Nitrous Oxide ($N_2$0) Service**
**** Outlet purge port is standard and included in base prices**

NOTE: Different colored knobs are available upon request. Contact factory for available colors.

Vespel® is a registered trademark of Dupont.

Parker Instrumentation

QUANTUM 935Y

1/2" Valve

VERIFLO
ISO 9001 Certified

Parker Hannifin Corporation's Veriflo Division presents the 935Y 1/2" valve. The 935Y provides superior control of gases and liquids under high flow, low pressure conditions where absolute purity is essential. The 935Y is a "positive retraction" diaphragm valve - an engineered feature which has reduced the surface area and entrapment potential inherent in bellows valves.

There are no springs or retaining clips in the gas stream. In fact, there are no superfluous parts. This pure design yields a valve with neither entrapment zones nor particle generating surfaces.

features

- "Vericlean" low sulfur high purity 316L material which enhances electropolishing, welding, and corrosion resistance
- Internally threadless and springless
- Fully functional from a vacuum to 300 psig
- Aerodynamic, fully swept flow passages
- Minimum particle generation and particle entrapment areas
- Standard surface finish is 10 Ra micro inch (.254 micro meter) 5 Ra mirco inch or less option available
- 100% Helium leak tested
- "Hurricane" cleaning, standard proprietary cleaning process, removes metallic ions, organic films and surface adhering particles

materials of construction

Wetted

Body . . . . . "VeriClean"Veriflo's custom high purity Type 316L Stainless Steel™
Diaphragm . . . . . 316L Stainless Steel
Seal . . . . . PCTFE , optional Vespel®

Non-wetted

Knob (blue) . . . . . Aluminum
Stem . . . . . 416 Stainless Steel
Bushing. . . . . Aluminum silicon bronze

operating conditions

Maximum operating pressure . . . . . 300 psig (20.7 barg)
Minimum operating pressure . . . . . Vacuum
Temperature . . . . . PCTFE -40°F to 165°F (-40°C to 73°C)
Vespel® . . . . . -40°F to 350°F (-40°C to 177°C)

Bake out in open position:
PCTFE . . . . . 250°F (121°C)
Vespel® . . . . . 350°F (176°C)

flow capacity

C_V . . . . . 2.8 (orifice size = 0.5")
(SEMI Flow Coefficient Test #F-32-0998)

Design leak rate

Outboard . . . . . 2×10^{-9} scc/sec He
Inboard . . . . . 2×10^{-10} scc/sec He
Across seat . . . . . 4×10^{-9} scc/sec He

standard configurations

Any combination of FS male and/or female fittings.
Other configurations are 1/2" up to 1.5" tube

surface finish

Standard . . . . . 10 Ra micro inch (.25 micro meter) or less
Optional . . . . . 5 Ra micro inch (.13 micro meter) or less

Parker Instrumentation

QUANTUM 935Y

Dimensional Drawing

935Y1
Horizontal Cross

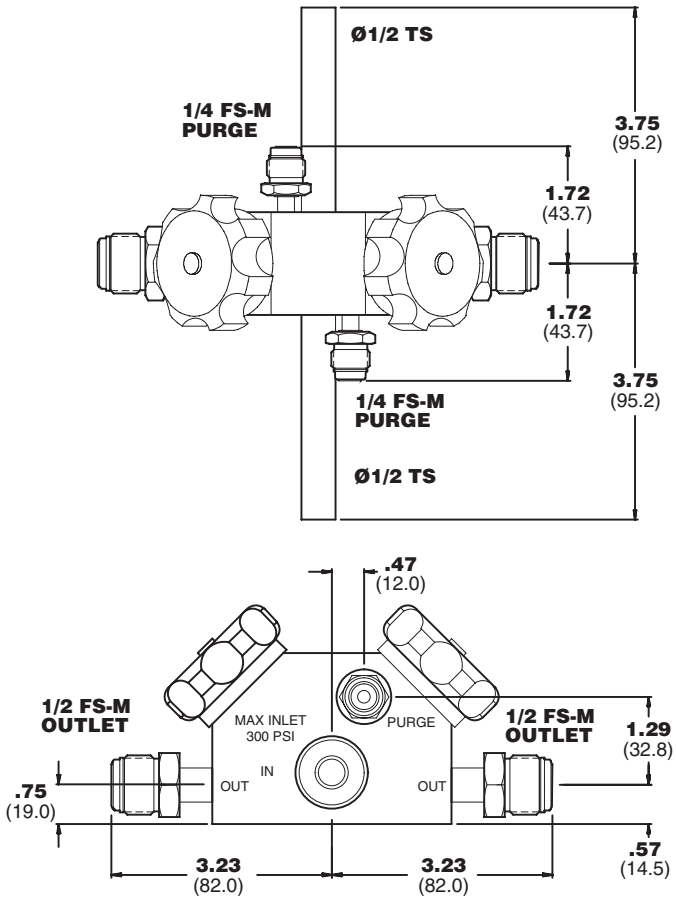

935Y2
Vertical Tee

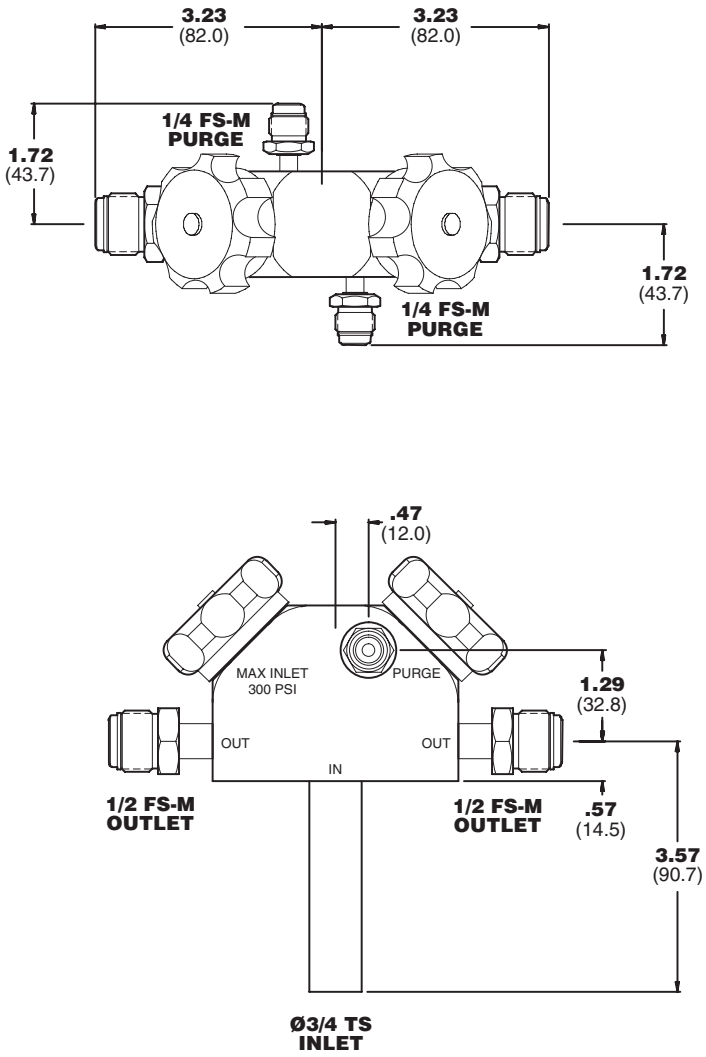

QUANTUM 935Y

Dimensional Drawing

935Y3
Horizontal Tee

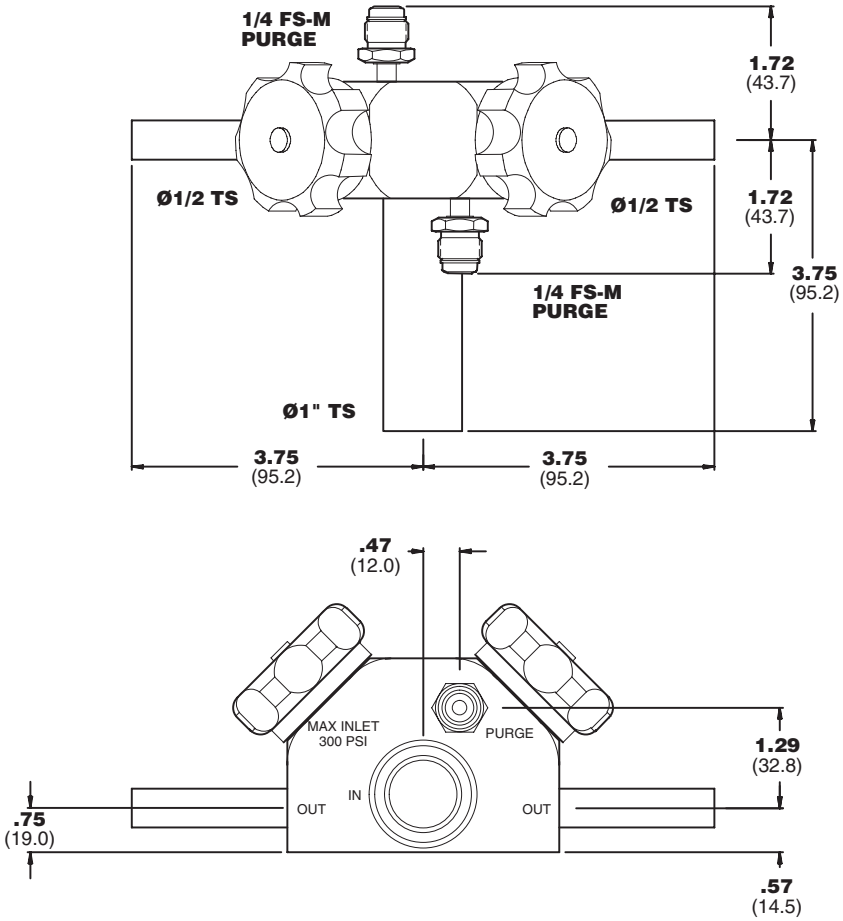

935Y4
Horizontal Angled Cross

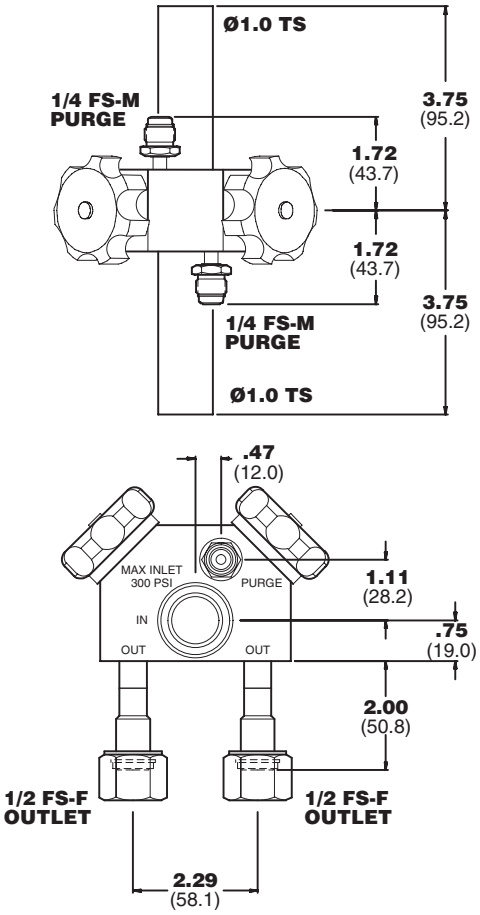

QUANTUM 935Y

Flow Curve

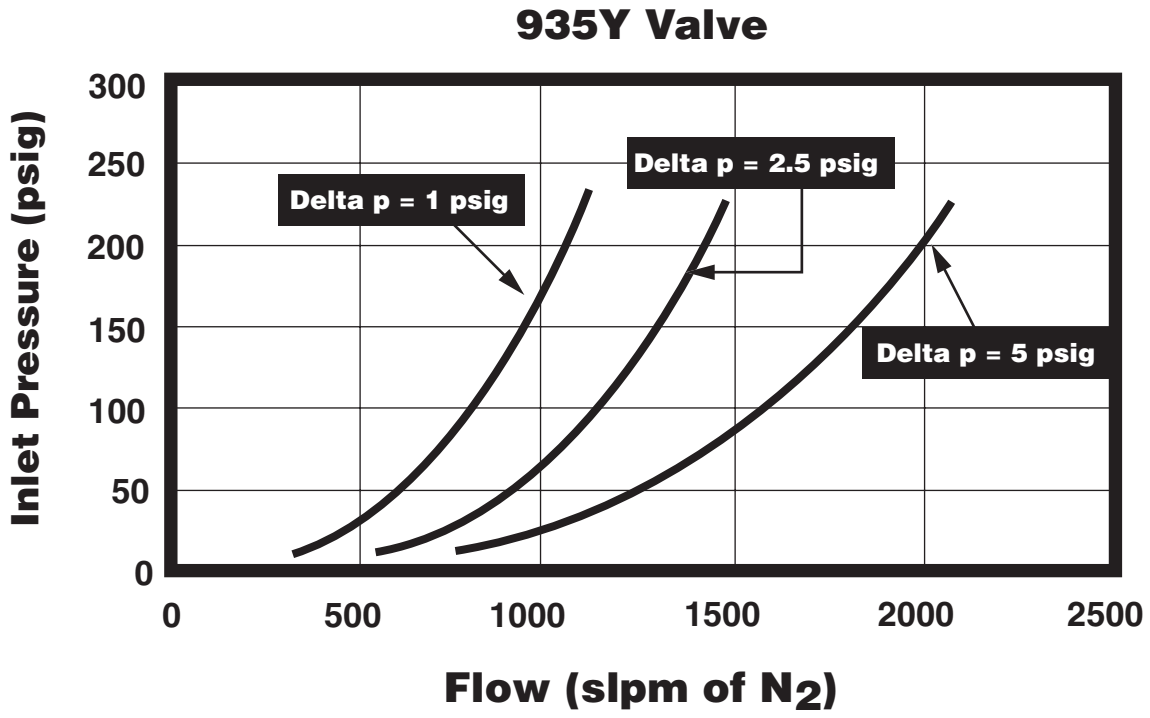

Ordering Information

935Y 1 TS8 FS8 MM P1 FSM VESP

BASIC SERIES
935Y

FLOW PATH
1 = Horizontal Cross
2 = Vertical Tee
3 = Horizontal Tee
4 = Horizontal Angled Cross

INLET CONNECTION
TS8 = 1/2" Tube
TS12 = 3/4" Tube
TS16 = 1" Tube
TS24 = 1.5" Tube

*** Recommended for Nitrous Oxide (N_2O) Service.**
**** Includes 2 purge ports, one for each valve as standard.**

Vespel® is a registered trademark of DuPont Company.

OPTIONAL FEATURES
C1 = Purge Port capped and leak tested-per port
C2 = Outlet Face Seal Capped and leak tested
VESP = Vespel® Seals*

PURGE PORT CONNECTIONS
FSM = 1/4" Face Seal Male
FSF = 1/4" Face Seal Female

PURGE PORT**
P1 = Down Steam Purge Port

OUTLET CONNECTION STYLE
M = Male Face Seal
F = Female Face Seal
Blank = Tube Stub

OUTLET CONNECTION
TS8 = 1/2" Tube
TS12 = 3/4" Tube
TS16 = 1" Tube
FS8 = 1/2" Face Seal
FS12 = 3/4" Face Seal

Parker Instrumentation

18 Series

High Flow/Bulk System Diaphragm Valve

VERIFLO
ISO 9001 Certified

Parker Hannifin Corporation's Veriflo Division presents the 18 Series valves. The 18 Series provide a high-flow, positive shut off for high purity gas/fluid systems. This 1/2" and 3/8" spring type diaphragm valve offers superior leak integrity for Manually and Pneumatically Actuated applications with pressure ranges from vacuum to 1500 psig.

features

- Spring type design.
- Metal diaphragm sealed.
- Minimal particle generation.
- Minimal contributions of moisture, oxygen and fygrocarbons.
- High cycle life
- Available with inlet and outlet purge ports.

materials of construction

Wetted

Body . . . . . 316L Stainless Steel™ VIM/VAR
optional Nickel 200 or Hastelloy® C-22
Seat . . . . . PCTFE
Diaphragm. . . . . Elgiloy®
Lower Stem . . . . . 316L Stainless Steel VIM/VAR
Spring . . . . . 316L Stainless Steel

Non-wetted

Stem Button . . . . . 303 Stainless Steel
Upper Stem . . . . . AL-SI Bronze
Bonnet . . . . . 303 Stainless Steel
Screw. . . . . 18-8 Stainless Steel
Set Screw . . . . . Alloy Steel
Actuator Housing . . . . . Aluminum
Handle. . . . . Aluminum

operating conditions

Pressure rating
Manually Actuated. . . . . Vacuum to 1500 psig
Pneumatically Actuated. . . . . Vacuum to 1200 psig at 70°F

Actuator Pressure to open . . . . . 70 psig min. to 125 psig max.

Temperature:
PCTFE . . . . . -65°F to 150°F(-54°C to 65°C)

surface finish

Standard Ra. . . . . 10 Ra electropolished (EP)

functional performance

Flow Capacity
Manually Actuated . . . . . C_V 1.3
Pneumaticlly Actuated . . . . . C_V 1.0

Design Leak Rate
Outboard . . . . . 1×10^{-10} scc./sec He
Inboard less than . . . . . 2×10^{-10} scc./sec He
Across seat* less than . . . . . 4×10^{-9} scc./sec He

*Excluding permeation of PCTFE

Parker Instrumentation

18 Series

Dimensional Drawings

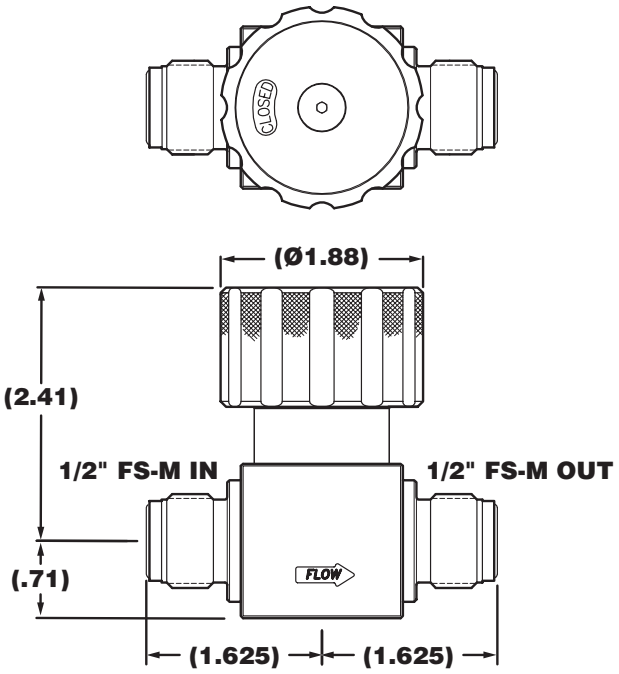

18E Series VacuSeal

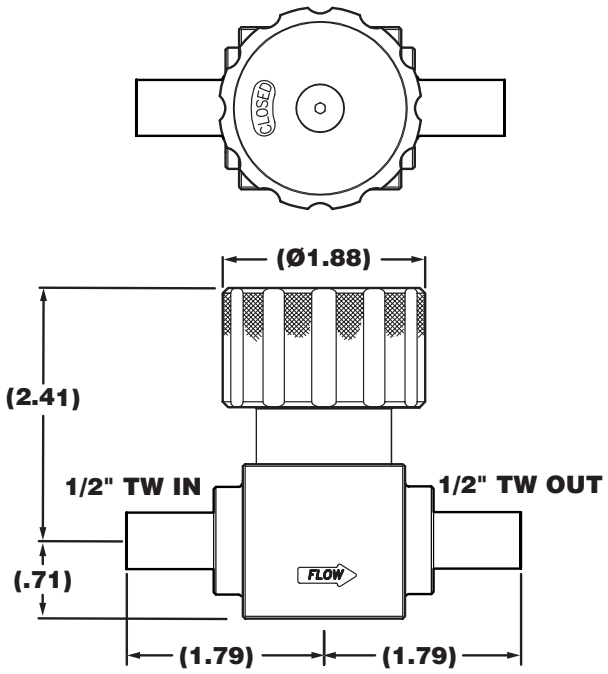

18E Series Tubestub

Ordering Information

18E - 8 8 2 TW TW - PI

BASIC SERIES
18E = Electropolished, Indicating Handwheel
18 = Non-Electropolished Handwheel
93-18E = Electropolished Pneumatically Actuated
93-18 = Non-Electropolished Pneumatically Actuated

INLET PORT SIZE
6 = 3/8"
8 = 1/2"

OUTLET PORT SIZE
6 = 3/8"
8 = 1/2"

MATERIAL
2 = 316L Vericlean
16 = Hastelloy C-22®

OPTIONAL FEATURES
PI = Vespel® Seat

OUTLET CONNECTION
TW = Tube Weld
VF = VacuSeal™ Female
VM = VacuSeal™ Male (1/4")
Vms = VacuSeal™ Male Swivel

INLET CONNECTION
TW = Tube Weld
VF = VacuSeal™ Female
VM = VacuSeal™ Male (1/4")
Vms = VacuSeal™ Male Swivel

Parker Instrumentation

Parker Hannifin Corporation
6035 Parkland Blvd.
Cleveland, Ohio 44124-4141
Telephone: (216) 896-3000
Fax: (216) 896-4000
www.parker.com

Parker Hannifin Corporation

About Parker Hannifin Corporation

Parker Hannifin is a leading global motion-control company dedicated to delivering premier customer service. A Fortune 500 corporation listed on the New York Stock Exchange (PH), our components and systems comprise over 1,400 product lines that control motion in some 1,000 industrial and aerospace markets. Parker is the only manufacturer to offer its customers a choice of hydraulic, pneumatic, and electromechanical motion-control solutions. Our Company has the largest distribution network in its field, with over 7,500 distributors serving nearly 400,000 customers worldwide.

Parker's Charter

To be a leading worldwide manufacturer of components and systems for the builders and users of durable goods. More specifically, we will design, market and manufacture products controlling motion, flow and pressure. We will achieve profitable growth through premier customer service.

Product Information

North American customers seeking product information, the location of a nearby distributor, or repair services will receive prompt attention by calling the Parker Product Information Center at our toll-free number: 1-800-C-PARKER (1-800-272-7537). In Europe, call 00800-C-PARKER-H (00800-2727-5374).

The Aerospace Group is a leader in the development, design, manufacture and servicing of control systems and components for aerospace and related high-technology markets, while achieving growth through premier customer service.

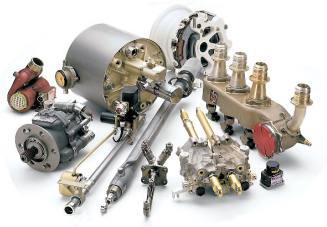

The Climate & Industrial Controls Group designs, manufactures and markets system-control and fluid-handling components and systems to refrigeration, air-conditioning and industrial customers worldwide.

The Fluid Connectors Group designs, manufactures and markets rigid and flexible connectors, and associated products used in pneumatic and fluid systems.

The Seal Group designs, manufactures and distributes industrial and commercial sealing devices and related products by providing superior quality and total customer satisfaction.

The Hydraulics Group designs, produces and markets a full spectrum of hydraulic components and systems to builders and users of industrial and mobile machinery and equipment.

The Filtration Group designs, manufactures and markets quality filtration and clarification products, providing customers with the best value, quality, technical support, and global availability.

The Automation Group is a leading supplier of pneumatic and electromechanical components and systems to automation customers worldwide.

The Instrumentation Group is a global leader in the design, manufacture and distribution of high-quality critical flow components for worldwide process instrumentation, ultra-high-purity, medical and analytical applications.

Parker Hannifin Corporation
Veriflo Division
250 Canal Boulevard
Richmond, CA 94804-0034
Telephone 510.235.9590
Fax 510.232.7396
Web site: http://www.veriflo.com

Catalog: 4507
LitPN: 25000181
Revision: A • 10/03