Two-Valve Block & Bleed Manifolds

.187" ORIFICE

Description

½" MNPT x ½" FNPT

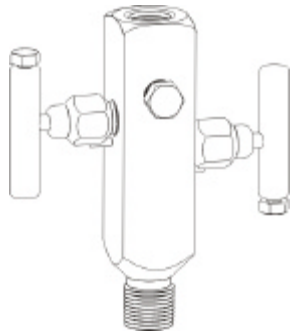

½" MNPT x ½" MNPT

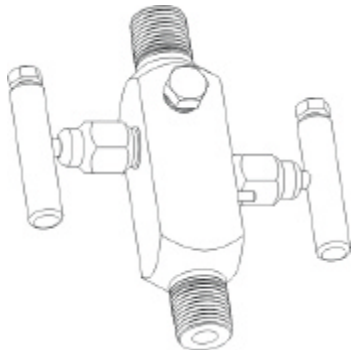

Body Style

V-570 Hard Seat

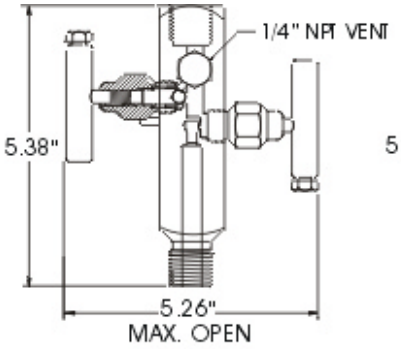

V-575 Soft Seat

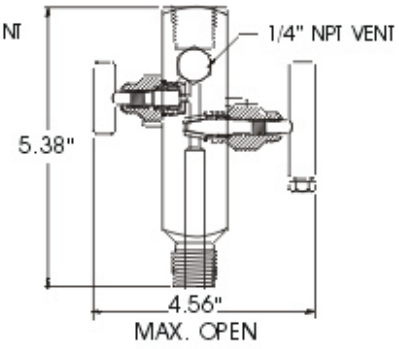

V-612 Hard Seat

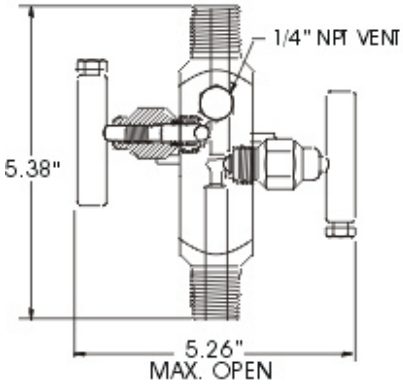

V-613 Soft Seat

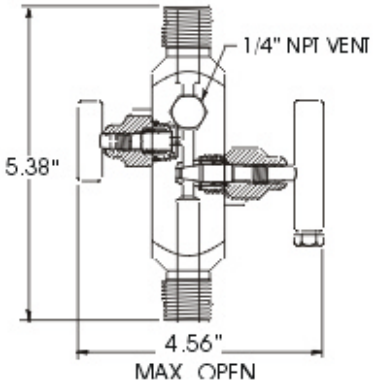

Above drawings shown with P9 Pipe Plug Option.

SEAT	MAX Cv RATINGS
Hard Ball	.53
Soft Cone	.83
Approx. Manifold Weight:	**3.0 lbs each [V-570 / 575 / 612 / 613]**

MATERIALS OF CONSTRUCTION

PART DESCRIPTION	CARBON STEEL	A105 CARBON STEEL	316 SS	MONEL®	HASTELLOY-C®
Body	ASTM A108-1215	ASTM A105-CF	ASTM A479-316	ASTM B164-N04405	ASTM B574-N10276
Bonnet	ASTM A108-1215	ASTM A479-316	ASTM A479-316	ASTM B164-N04405	ASTM B574-N10276
Stem	ASTM A582-303	ASTM A479-316	ASTM A479-316	ASTM B164-N04405	ASTM B574-N10276
Seal Retainer	ASTM A479-316	ASTM A479-316	ASTM A479-316	ASTM B164-N04405	ASTM B574-N10276
Handle Assembly	ASTM A108	ASTM A108	ASTM A582 (18-8)	ASTM A582 (18-8)	ASTM A582 (18-8)
Plug(s)	ASTM A108-1215	ASTM F593 (18.8)	ASTM A182-F (18-8)	ASTM B164-N04405	ASTM B574-N10276

- Carbon Steel Manifolds are Zinc Cobalt Plated with Dichromate Dip
- 316 SS Manifolds Meet NACE MR0175 Requirements (Latest Revision)
- 100% Pressure Tested
- Carbon Steel Weld End Connection Bodies are AISI 1018

ORDERING INFORMATION

BODY STYLE	BODY CODE	SEAT CODE	STEM SEAL CODE		OPTION CODES					
Hard Seat										
V-570				-						
V-612				-						
Soft Seat										
V-575				-						
V-613				-						

BODY CODE	
[Std.] Carbon Steel	C
A105 Carbon Steel	P
[Std.] 316 SS	S
Monel®	M
Hastelloy-C®	H

HARD SEAT CODE	
[Std.] Carbide Ball	C
Ceramic Ball	R
316 SS Ball	6
Hastelloy-C® Ball	H
K-Monel® Ball	N

SOFT SEAT CODE	
D	Delrin® Cone / Washer [Std.]
K	Kel-F® Cone / Washer
P	PEEK® Cone / Washer
T	Teflon® Cone / Washer
Z	Tefzel Cone / Washer

STEM SEAL CODE	
[Std.] Teflon® Pressure-Core™	T
Grafoil® Packed	G
Teflon® Packed [Hard Seat Only]	P
Viton® O-Ring	V
Low-Temp Pressure-Core™	J

OPTIONS

- Bonnet Handle Lock-Out
- Bonnet Lock Plates

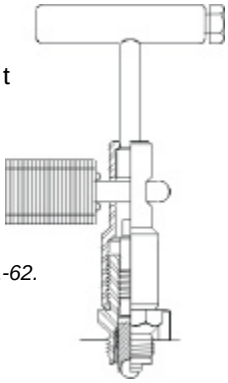

See Options/Accessories Pages 61-62.

OPTION CODE	OPTION DESCRIPTION
AM7	½" Male Pipe Socket Weld (Process Port)
GA	Anti-Tamper Bonnet (All Positions - Hard Seats Only)
GC	Anti-Tamper Bonnet (Isolate Valve Only)
GE	Anti-Tamper Bonnet (Vent Valve Only - Hard Seats Only)
GJ	Bonnet Lock-Out (All Positions - Lock Not Provided - Hard Seats Only)
GK	Bonnet Lock-Out (Isolate Valve Only - Lock Not Provided)
GM	Bonnet Lock-Out (Vent Valve Only - Lock Not Provided - Hard Seats Only)
P9	¼" Hex Head Pipe Plug in Vent/Test Port
TH	Hydrostatic Testing
W	Safety Bonnet Lock Plate
WK	Paper Tag
W1	316 SS Tag (20 Characters ~ See page 61)
XL	Clean for Critical Service (Oxygen or Chlorine)

PRESSURE & TEMPERATURE

BODY MATERIAL	HARD SEAT Teflon Pressure-Core	HARD SEAT Grafoil
Carbon Steel Code C	10,000 PSI @ 200° F 8,000 PSI @ 450° F	Not Available.
A105 Carbon Steel Code P	10,000 PSI @ 200° F 8,000 PSI @ 450° F	6,000 PSI @ 200° F 1,500 PSI @ 800° F
316 SS Code S	10,000 PSI @ 200° F 8,000 PSI @ 450° F	6,000 PSI @ 200° F 1,500 PSI @ 1,000° F
See Page 5:	**Chart D**	**Chart F**

BODY MATERIAL	SOFT SEAT (Delrin) Teflon Pressure-Core	SOFT SEAT (Peek) Teflon Pressure-Core
Carbon Steel Code C	6,000 PSI @ 200° F Max.	10,000 PSI @ 200° F 3,000 PSI @ 400° F
316 SS Code S	6,000 PSI @ 200° F Max.	10,000 PSI @ 200° F 3,000 PSI @ 400° F
See Page 5:	**Chart B**	**Chart B**

Two-Valve Block & Bleed Manifolds

.187" ORIFICE

Description

½" FNPT x ½" MNPT

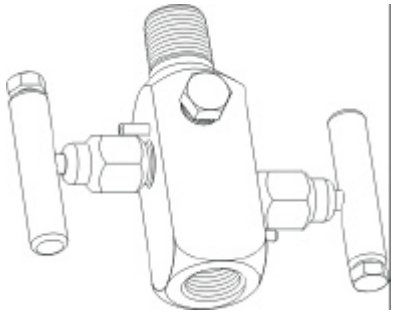

½" FNPT x ½" FNPT

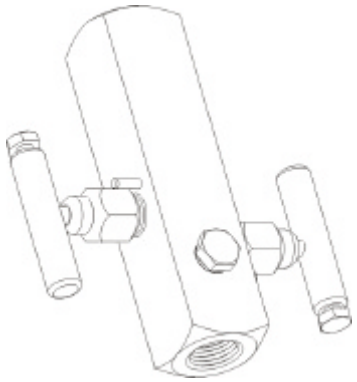

Body Style

V-614 Hard Seat

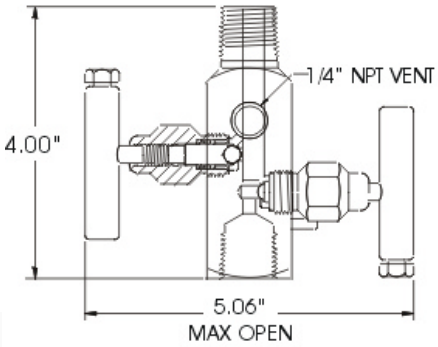

V-615 Soft Seat

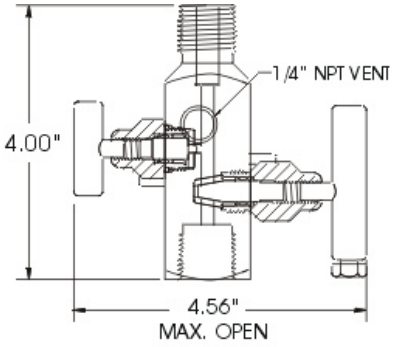

V-626 Hard Seat

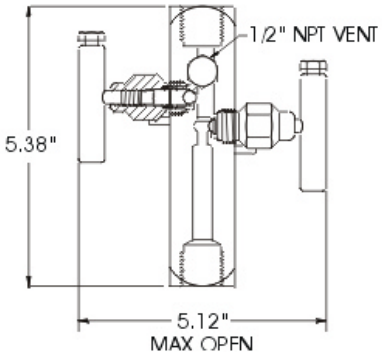

V-627 Soft Seat

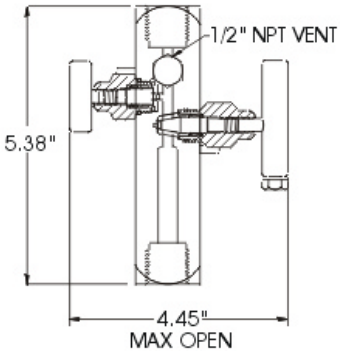

Above drawings shown with P9 Pipe Plug Option.

SEAT	MAX Cv RATINGS
Hard Ball	.53
Soft Cone	.83
Approx. Manifold Weight:	**3.0 lbs each [V-626 / 627]** **2.4 lbs each [V-614 / 615]**

MATERIALS OF CONSTRUCTION

PART DESCRIPTION	CARBON STEEL	A105 CARBON STEEL	316 SS	MONEL®	HASTELLOY-C®
Body	ASTM A108-1215	ASTM A105-CF	ASTM A479-316	ASTM B164-N04405	ASTM B574-N10276
Bonnet	ASTM A108-1215	ASTM A479-316	ASTM A479-316	ASTM B164-N04405	ASTM B574-N10276
Stem	ASTM A582-303	ASTM A479-316	ASTM A479-316	ASTM B164-N04405	ASTM B574-N10276
Seal Retainer	ASTM A479-316	ASTM A479-316	ASTM A479-316	ASTM B164-N04405	ASTM B574-N10276
Handle Assembly	ASTM A108	ASTM A108	ASTM A582 (18-8)	ASTM A582 (18-8)	ASTM A582 (18-8)
Plug(s)	ASTM A108-1215	ASTM F593 (18.8)	ASTM A182-F (18-8)	ASTM B164-N04405	ASTM B574-N10276

- Carbon Steel Manifolds are Zinc Cobalt Plated with Dichromate Dip
- 316 SS Manifolds Meet NACE MR0175 Requirements (Latest Revision)
- 100% Pressure Tested
- Carbon Steel Weld End Connection Bodies are AISI 1018

ORDERING INFORMATION

BODY STYLE	BODY CODE	SEAT CODE	STEM SEAL CODE		OPTION CODES					
Hard Seat										
V-614				-						
V-626				-						
Soft Seat										
V-615				-						
V-627				-						

BODY CODE	
[Std.] Carbon Steel	C
A105 Carbon Steel	P
[Std.] 316 SS	S
Monel®	M
Hastelloy-C®	H

HARD SEAT CODE	
[Std.] Carbide Ball	C
Ceramic Ball	R
316 SS Ball	6
Hastelloy-C® Ball	H
K-Monel® Ball	N

SOFT SEAT CODE	
D	Delrin® Cone / Washer [Std.]
K	Kel-F® Cone / Washer
P	PEEK® Cone / Washer
T	Teflon® Cone / Washer
Z	Tefzel Cone / Washer

STEM SEAL CODE	
[Std.] Teflon® Pressure-Core™	T
Grafoil® Packed	G
Teflon® Packed [Hard Seat Only]	P
Viton® O-Ring	V
Low-Temp Pressure-Core™	J

OPTIONS

- Bonnet Handle Lock-Out
- Bonnet Lock Plates

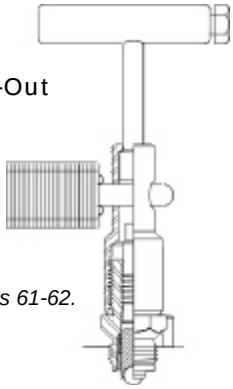

See Options/Accessories Pages 61-62.

OPTION CODE	OPTION DESCRIPTION
AM7	½" Male Pipe Socket Weld (Process Port)
GA	Anti-Tamper Bonnet (All Positions - Hard Seats Only)
GC	Anti-Tamper Bonnet (Isolate Valve Only)
GE	Anti-Tamper Bonnet (Vent Valve Only - Hard Seats Only)
GJ	Bonnet Lock-Out (All Positions - Lock Not Provided - Hard Seats Only)
GK	Bonnet Lock-Out (Isolate Valve Only - Lock Not Provided)
GM	Bonnet Lock-Out (Vent Valve Only - Lock Not Provided - Hard Seats Only)
P9	¼" Hex Head Pipe Plug in Vent/Test Port
TH	Hydrostatic Testing
W	Safety Bonnet Lock Plate
WK	Paper Tag
W1	316 SS Tag (20 Characters ~ See page 61)
XL	Clean for Critical Service (Oxygen or Chlorine)

PRESSURE & TEMPERATURE

BODY MATERIAL	HARD SEAT Teflon Pressure-Core	HARD SEAT Grafoil
Carbon Steel Code C	10,000 PSI @ 200° F 8,000 PSI @ 450° F	Not Available.
A105 Carbon Steel Code P	10,000 PSI @ 200° F 8,000 PSI @ 450° F	6,000 PSI @ 200° F 1,500 PSI @ 800° F
316 SS Code S	10,000 PSI @ 200° F 8,000 PSI @ 450° F	6,000 PSI @ 200° F 1,500 PSI @ 1,000° F
See Page 5:	**Chart D**	**Chart F**

BODY MATERIAL	SOFT SEAT (Delrin) Teflon Pressure-Core	SOFT SEAT (Peek) Teflon Pressure-Core
Carbon Steel Code C	6,000 PSI @ 200° F Max.	10,000 PSI @ 200° F 3,000 PSI @ 400° F
316 SS Code S	6,000 PSI @ 200° F Max.	10,000 PSI @ 200° F 3,000 PSI @ 400° F
See Page 5:	**Chart B**	**Chart B**

Two-Valve Stabilized Block & Bleed Manifolds

.187" ORIFICE

Description

MNPT x ½" MNPT

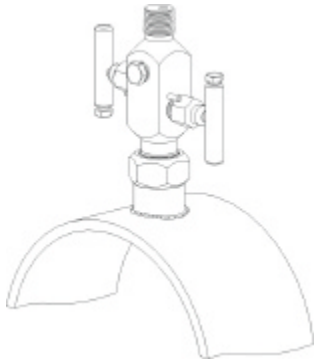

MNPT x ½" FNPT

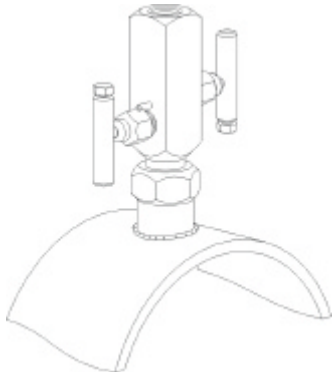

½" FNPT x (3) ½" FNPT

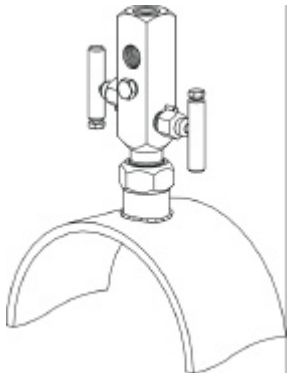

Body Style

V-700 Hard Seat

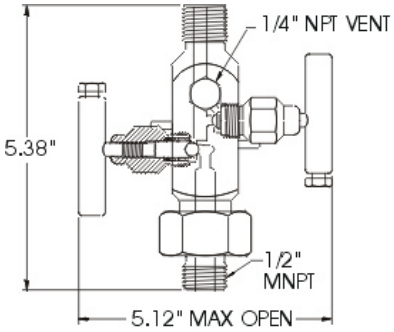

V-702 Hard Seat

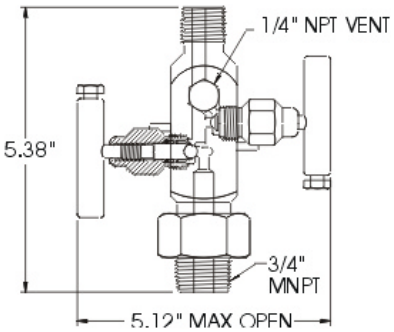

V-704 Hard Seat

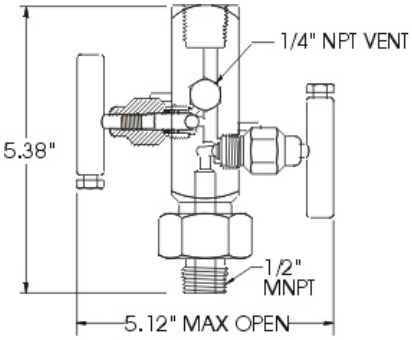

V-706 Hard Seat

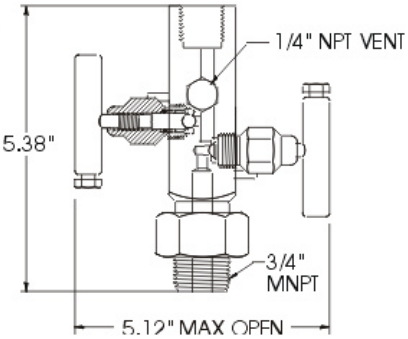

V-708 Hard Seat

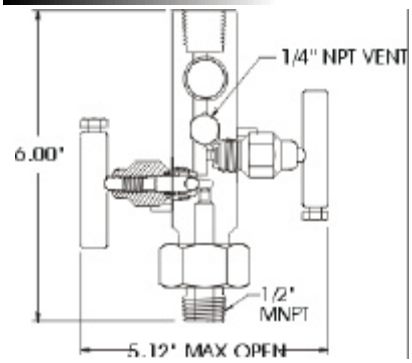

All drawings shown with P9 Pipe Plug Option.

SEAT	MAX Cv RATINGS
Hard Ball	.53
Approx. Manifold Weight:	**3.0 lbs each [V-700 / 702 / 704 / 706]** **3.5 lbs each [V-708]**

MATERIALS OF CONSTRUCTION

PART DESCRIPTION	CARBON STEEL	316 SS	MONEL®	HASTELLOY-C®
Body	Manifold not available in Carbon Steel.	ASTM A479-316	Consult Factory.	Consult Factory.
Bonnet		ASTM A479-316		
Stem		ASTM A479-316		
Seal Retainer		ASTM A479-316		
Handle Assembly		ASTM A582 (18-8)		
Plug(s)		ASTM A182-F (18-8)		

- Carbon Steel Manifolds are Zinc Cobalt Plated with Dichromate Dip
- 316 SS Manifolds Meet NACE MR0175 Requirements (Latest Revision)
- 100% Pressure Tested
- Carbon Steel Weld End Connection Bodies are AISI 1018

ORDERING INFORMATION

BODY STYLE	BODY CODE	SEAT CODE	STEM SEAL CODE		OPTION CODES					
Hard Seat										
V-700				-						
V-702				-						
V-704				-						
V-706				-						
V-708				-						

BODY CODE	
[Std.] 316 SS	S
Monel®	M
Hastelloy-C®	H

HARD SEAT CODE	
C	Carbide Ball [Std.]
R	Ceramic Ball
6	316 SS Ball

STEM SEAL CODE	
[Std.] Teflon® Pressure-Core™	T
Grafoil® Packed	G
Teflon® Packed	P
Viton® O-Ring	V
Low-Temp Pressure-Core™	J

OPTION CODE	OPTION DESCRIPTION
GA	Anti-Tamper Bonnet (All Positions - Hard Seats Only)
GC	Anti-Tamper Bonnet (Isolate Valve Only)
GE	Anti-Tamper Bonnet (Vent Valve Only - Hard Seats Only)
GJ	Bonnet Lock-Out (All Positions - Lock Not Provided - Hard Seats Only)
GK	Bonnet Lock-Out (Isolate Valve Only - Lock Not Provided)
GM	Bonnet Lock-Out (Vent Valve Only - Lock Not Provided - Hard Seats Only)
P9	¼" Hex Head Pipe Plug in Vent/Test Port
TH	Hydrostatic Testing
W	Safety Bonnet Lock Plate
WK	Paper Tag
W1	316 SS Tag (20 Characters ~ See page 61)
XL	Clean for Critical Service (Oxygen or Chlorine)

OPTIONS

- Versa-Mount Brackets
- Bonnet Handle Lock-Out
- Bonnet Lock Plates
- Integral Tube Fitting Connections

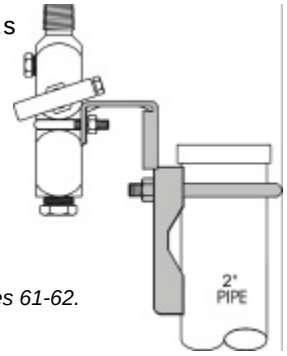

See Options/Accessories Pages 61-62.

PRESSURE & TEMPERATURE

BODY MATERIAL	HARD SEAT Teflon Pressure-Core	HARD SEAT Grafoil
316 SS	10,000 PSI @ 200° F 8,000 PSI @ 450° F	6,000 PSI @ 200° F 1,500 PSI @ 1,000° F
See Page 5:	Chart D	Chart F

Three-Valve Double Block & Bleed Manifolds

.187" ORIFICE

Description

½" MNPT x ½" FNPT

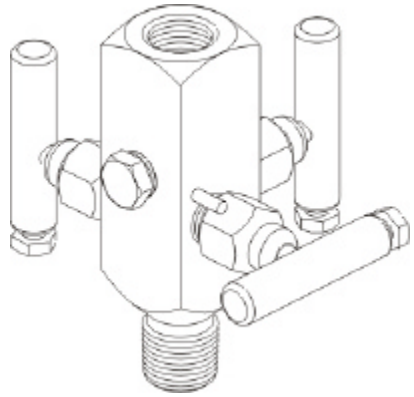

Body Style

V-690 Hard Seat

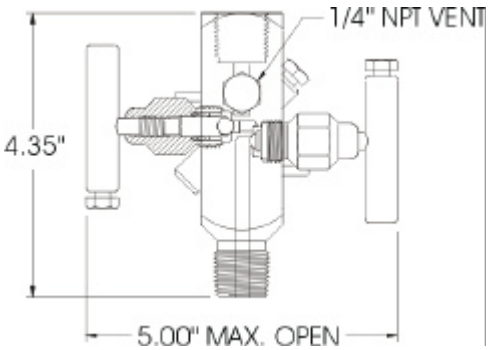

¾" MNPT x ½" FNPT

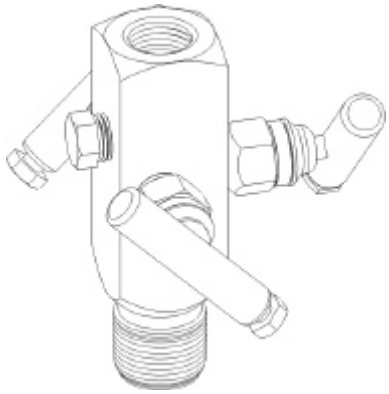

V-692 Hard Seat

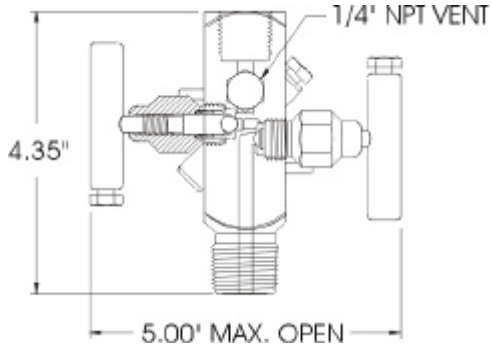

Above drawings shown with P9 Pipe Plug Option.

SEAT	MAX Cv RATINGS
Hard Ball	.53
Soft Cone	.83
Approx. Manifold Weight:	**3.0 lbs each [V-690 / 692]**

MATERIALS OF CONSTRUCTION

PART DESCRIPTION	CARBON STEEL	316 SS	MONEL®	HASTELLOY-C®
Body	Consult Factory.	ASTM A479-316	Consult Factory.	Consult Factory.
Bonnet		ASTM A479-316		
Stem		ASTM A479-316		
Seal Retainer		ASTM A479-316		
Handle Assembly		ASTM A582 (18-8)		
Plug(s)		ASTM A182-F (18-8)		

- Carbon Steel Manifolds are Zinc Cobalt Plated with Dichromate Dip
- 316 SS Manifolds Meet NACE MR0175 Requirements (Latest Revision)
- 100% Pressure Tested
- Carbon Steel Weld End Connection Bodies are AISI 1018

ORDERING INFORMATION

BODY STYLE	BODY CODE	SEAT CODE	STEM SEAL CODE		OPTION CODES					
Hard Seat										
V-690				-						
V-692				-						

BODY CODE	
[Std.] 316 SS	S

	HARD SEAT CODE
C	Carbide Ball [Std.]
R	Ceramic Ball
6	316 SS Ball

STEM SEAL CODE	
[Std.] Teflon® Pressure-Core™	T
Grafoil® Packed	G
Teflon® Packed	P
Viton® O-Ring	V
Low-Temp Pressure-Core™	J

OPTION CODE	OPTION DESCRIPTION
AM7	½" Male Pipe Socket Weld (Process Port)
GA	Anti-Tamper Bonnet (All Positions)
GC	Anti-Tamper Bonnet (Isolate Only)
GE	Anti-Tamper Bonnet (Vent Valve Only)
GJ	Bonnet Lock-Out (All Positions - Lock Not Provided)
GK	Bonnet Lock-Out (Isolate Only - Lock Not Provided)
GM	Bonnet Lock-Out (Vent Valve Only - Lock Not Provided)
P9	¼" Hex Head Pipe Plug in Vent/Test Port
TH	Hydrostatic Testing
W	Safety Bonnet Lock Plate
WK	Paper Tag
W1	316 SS Tag (20 Characters ~ See page 61)
XL	Clean for Critical Service (Oxygen or Chlorine)

OPTIONS

- Bonnet Handle Lock-Out
- Bonnet Lock Plates

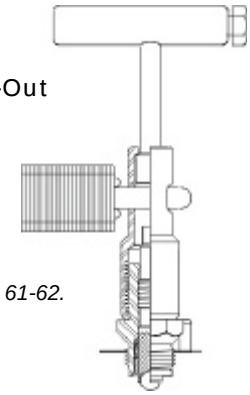

See Options/Accessories Pages 61-62.

PRESSURE & TEMPERATURE

BODY MATERIAL	HARD SEAT Teflon Pressure-Core	HARD SEAT Grafoil
316 SS	10,000 PSI @ 200° F 8,000 PSI @ 450° F	6,000 PSI @ 200° F 1,500 PSI @ 1,000° F
See Page 5:	Chart D	Chart F